Press for T.D

Datasheet

FF/000/MD/BF/FL

Description

Metal Faced Dual Purpose Access Panel, Supplied with the Patented FlipFix Fitting Device, Non fire rated, Metal Door, Beaded Frame, Flush Lock, Single Door Unit, Powder Coated RAL 9010 30% Gloss.
Get your panel installed in as little as 5 minutes. Just flip and fix. Say goodbye to wood, screws and glue!

PRODUCT TYPE	FIRE RATING	SMOKE TESTED	DOOR TYPE	FRAME TYPE	MASTER LOCK TYPE	SECONDARY LOCK TYPE	NUMBER OF DOOR LEAVES	AIRTIGHT RATED	ACOUSTIC RATED
	N/A	N/A				N/A	1D	N/A	N/A

Section Drawing Height (H)

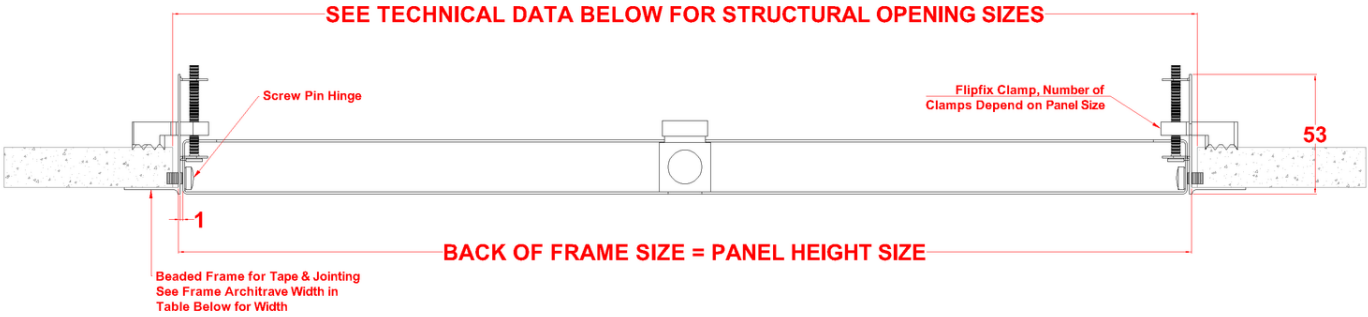

Section Drawing Width (W)

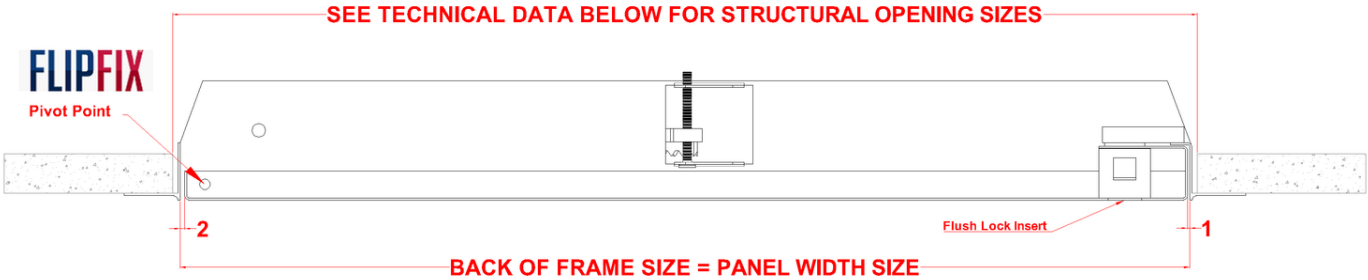

Indicative Product Images (Colour and door handing may differ from that shown)

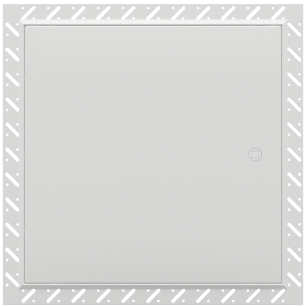





Technical Data

Wall or Ceiling or Both (Dual)	Dual
Fire Rating	· No Rating
Smoke Tested	No Rating

Airtightness Tested	No Rating
Acoustic Tested	No Rating
Corrosion class C1, C2, C3, C4	C1 - Very Low: Exterior: Not suitable for outdoor use. Interior: Heated buildings with clean atmospheres, e.g. offices, shops, schools, hotels.
Important Safety Notice	· FlipFix access panels are for inspection purposes only. They should not be climbed through & used to support body weight.
Flexible Wall Types	· Plasterboard clad partitions
Ceiling Types	· Plasterboard clad ceilings
Frame Fixing Types	· Clamped in place with the FlipFix Clamps. The FlipFix device covers boards from 8mm to 32mm.
Structural Opening Size	· Panel Height Size + 5mm x Panel Width Size + 5mm
Panel Size Formula H x Wmm	Overall Back of Frame Size
Clear opening size through the installed panel with the door leaf open at 90 degrees	· Panel Height - 30mm x Panel Width - 50mm
Composition / Manufacturing	
Quality Category	Mid Range
Product Design Category	Standard Product
Ironmongery Details	· Plastic FlipFix Flush Lock, manufactured from Nylon (PA6) · Screw Pin Hinge, manufactured from Bright Zinc Plated (BZP) steel · Plastic FlipFix fixing device manufactured from Nylon (PA) + 30% fibreglass
Lock Security Level	Grade 1 – Low Security
Frame Architrave Width (e.g. Picture / Beaded Frame)	· 25mm
Frame Steel Thickness	0.9mm
Door Steel Thickness	0.9mm
Door & Frame Material Grade	· Frame: Zintec Steel to BS EN 10152 : 2017 DC01 + ZE 25/25 · Door Leaf: Zintec Steel to BS EN 10152 : 2017 DC01 + ZE 25/25
Frame Depth	53mm
Board Infill Type	· None
Door Insulation Type	· None
Seal Type	· None
Paint Type	· Polyester Powder Coated · RAL 9010 30% Gloss Pure white

Installation Guide

1) To fit the panel, cut the plasterboard to the structural opening size required ensuring the aperture is 5mm larger than the panel size.

2) Place the frame in the aperture, no need to remove the door from the frame.

3) Make sure you set your drill to a low torque setting before the next step.

4) Proceed to screw the FlipFix device in place until it grips on to the rear of the plasterboard securely.

5) If the door has been removed from the frame, refit the door by tightening up the hinge bolts back in position and closing the door.

6) Lock the door with the key, ensuring it is flush with the frame. Sit back and relax, you've just saved yourself 20 minutes.

Independent support may be needed for the Access Panels weight.

Before applying the plaster skim coat, apply joint filler and scrim tape over the junction between the beaded frame and plasterboard to prevent cracking.