3 Years
Product Warranty
UK Only

Vega Hybrid

Kosnic
LIGHTING • SIMPLY BETTER

08639 VEGH30

Vega Hybrid Solar & Mains powered Flood light 30W 3000K

- High efficiency of 150lm/W
- Hybrid power supply, utilizing both a high-output monocrystalline silicon solar panel and mains electricity
- Integrated microwave sensor compatible with the Uni-Remote for easy configuration and control
- Built-in microwave sensor provides enhanced motion detection and energy saving functionality
- Solar panel and floodlight can be installed up to 10m apart, with an optional extension cable for added flexibility
- Automatically toggles between solar and mains power based on battery capacity for uninterrupted operation
- Provided with 1.5m of H05RN-F 2x1mm² cable





Overview

The Kosnic Vega Hybrid is our highly energy efficient dual-mode flood light that utilises both solar power and mains electricity for uninterrupted operation. The built-in motion sensor can be completely configured for all of your environments with the Universal Remote.

IP65

General Information

Ambient Temperature Range (°C)	0 to 50
IP Rating	IP65
Materials	Housing: Die-cast aluminium, Solar panel: Monocrystalline silicon
Protection Rating	Class II
Installation Area	External
L80B10 Lifetime (h) @Ta 25 °C	104,000 h

Compliance

Others	UKCA, CE, RoHS, WEEE

Technical Summary	
Product Code	VEGH30
Default Power	30 W
Power Factor	>0.5
Default CCT	3,000 K
CRI	70
Lumens Output Maximum	4,500 lm
Maximum Efficiency	150 lm/W
L80B10 Lifetime (h) @Ta 25 °C	104,000 h
Total Product Weight	4.058 kg
Weight	1.96Kg, 2.09Kg (Solar Panel)
Dimensions (L x W x D) (mm)	167x145x200
Beam Angle - Lumi (°)	75
Sensor Function	Corridor, Motion

Tel: 01635 523 713
Email: sales@kosnic.com
Kosnic.com
Kosnic Lighting KosnicUK KosnicLightingUK

3 Years
Product Warranty
UK Only

Vega Hybrid

Kosnic
LIGHTING • SIMPLY BETTER

08639 VEGH30

Accessories

Product Code	Description	Type
BAT32LI4	Battery Li-ion 14.8V 3200mAh	Battery

Overview

The Kosnic Vega Hybrid is our highly energy efficient dual-mode flood light that utilises both solar power and mains electricity for uninterrupted operation. The built-in motion sensor can be completely configured for all of your environments with the Universal Remote.

IP65

General Information

Ambient Temperature Range (°C)	0 to 50
IP Rating	IP65
Materials	Housing: Die-cast aluminium, Solar panel: Monocrystalline silicon
Protection Rating	Class II
Installation Area	External

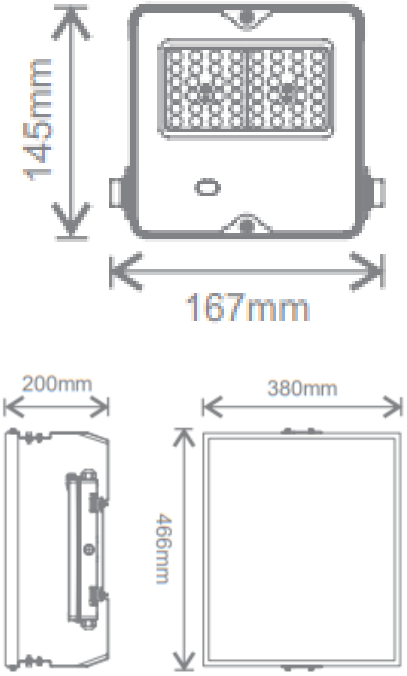

Tel: 01635 523 713
Email: sales@kosnic.com
Kosnic.com
Kosnic Lighting KosnicUK KosnicLightingUK KosnicUK