3 Years
Product Warranty
UK Only

Reon PAR

Kosnic
LIGHTING • SIMPLY BETTER

08384 P3811D-ESS27

Reon PAR38 11W Dimmable ES (E27) 30° 2700K Prismatic

- Save energy by up to 90%
- Long life of 15,000hrs
- Replacement for incandescent R63, R80
- Negligible UV output



Overview

The Reon LED PAR38 lamps offer huge energy savings over halogen lamps without compromising on brightness. The lamps can quickly replace halogen products in accent and general lighting applications, and once in place rapid payback is achieved.

Technical Summary	
Product Code	P3811D-ESS27
Input Voltage Supply	220-240Vac 50/60Hz
Default Power	11 W
Power Factor	0.60
Default CCT	2,700 K
CRI	≥82
Dimmable	Y
Lumens Output Maximum	1,000 lm
Maximum Efficiency	91 lm/W
L70B50 Lifetime (h) @Ta 25 °C	15,000 h
Glow wire temperature(°C)	650
Blue Light Hazard	RG1
Weight	0.202Kg
Dimensions (L x W x D) (mm)	139x∅120
LS Energy Efficiency Class	F

General Information

Ambient Temperature Range (°C)	-20°C to 40°C
Installation Area	Internal

Compliance

Others	UKCA, CE, RoHS, WEEE

Tel: 01635 523 713

Email: sales@kosnic.com

Kosnic.com

Kosnic Lighting KosnicUK KosnicLightingUK

3 Years
Product Warranty
UK Only

Reon PAR

Kosnic
LIGHTING • SIMPLY BETTER

08384 P3811D-ESS27

Overview

The Reon LED PAR38 lamps offer huge energy savings over halogen lamps without compromising on brightness. The lamps can quickly replace halogen products in accent and general lighting applications, and once in place rapid payback is achieved.

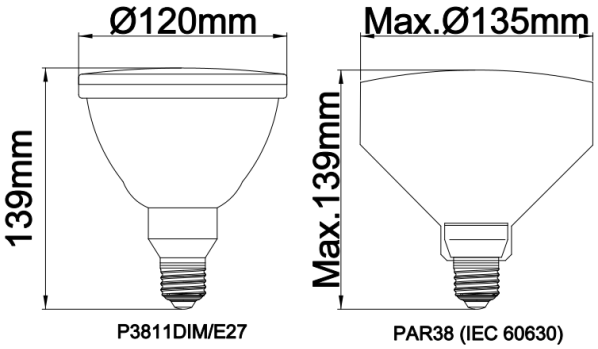

General Information

Ambient Temperature Range (°C)	-20°C to 40°C
Installation Area	Internal

Tel: 01635 523 713

Email: sales@kosnic.com

Kosnic.com

Kosnic Lighting KosnicUK KosnicLightingUK KosnicUK