7 Years
Product Warranty
UK Only

2 Years
On-Site Warranty
Main-land UK Only

Odin

Kosnic
LIGHTING • SIMPLY BETTER

08002 ODI24-SCT-GRY/DS

Odin sensor wall pack 14-24W CCT switchable grey

- High efficiency up to 129lm/W
- Optional plug-in emergency modules, available in standard, self-test and DALI
- Switchable wattage and CCT switchable (3000K/4000K/6500K)
- Dusk-to-dawn sensor, plug in before use
- Available in two beam angles versions
- Suitable to use at coastal areas
- IP65 and vandal resistant IK10



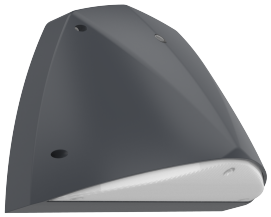

Overview

The Odin low glare LED Surface Luminaire offers a low maintenance solution to lighting for all areas, with switchable wattage and CCT to meet your needs.

IP65

General Information

Ambient Temperature Range (°C)	-20°C to 50°C
IK Rating	IK10
IP Rating	IP65
Materials	Housing - Polycarbonate
Protection Rating	Class I
Installation Area	Internal and External
L80B10 Lifetime (h) @Ta 25 °C	48,000 h

Compliance

LVD	EN 60598-1:2024, EN 60598-2-1:2021
EMC	EN 55015:2019+A11:2020, EN 61000-3-2:2019+A1:2021, EN 61000-3-3:2013+A1:2019+A2:2021, EN 61547:2023
Others	UKCA, CE, RoHS, WEEE

Technical Summary	
Product Code	ODI24-SCT-GRY/DS
Input Voltage Supply	220-240Vac 50/60Hz
Inrush Current (peak/duration) (A)	18.1A / 226us
Settable Wattages	14W, 17W, 21W, 24W
Driver Code/Part number	Boke
Power Factor	0.9
Settable Colour Temperatures	3000K, 4000K, 6500K
SDCM of CCT	<6
CRI	82
Dimmable	N
Flicker	<2%
Lumens Output Maximum	3,000 lm
Maximum Efficiency	129 lm/W
Maintained Luminous Flux	120 lm
L80B10 Lifetime (h) @Ta 25 °C	48,000 h
Nominal Lifetime (h)	50,000 h
Glow wire temperature(°C)	650
Blue Light Hazard	RG1
Weight	0.124Kg
Dimensions (L x W x D) (mm)	219x311x163
Beam Angle - Lumi (°)	100
LS Energy Efficiency Class	D
Sensor Function	Dawn to Dusk

Tel: 01635 523 713

Email: sales@kosnic.com

Kosnic.com

Kosnic Lighting KosnicUK KosnicLightingUK

7 Years
Product Warranty
UK Only

2 Years
On-Site Warranty
Main-land UK Only

Odin

Kosnic
LIGHTING • SIMPLY BETTER

08002 ODI24-SCT-GRY/DS

Optional Gear

Product Code	Description	Type
EMDD02/ST	2W self-test emergency module for LED DD and bulkhead	Self-test Emergency Module
EMDD02	2W standard emergency module for LED DD and bulkhead	Emergency Module

Overview

The Odin low glare LED Surface Luminaire offers a low maintenance solution to lighting for all areas, with switchable wattage and CCT to meet your needs.

IP65

General Information

Ambient Temperature Range (°C)	-20°C to 50°C
IK Rating	IK10
IP Rating	IP65
Materials	Housing - Polycarbonate
Nominal Lifetime (h)	50,000 h
Protection Rating	Class I
Installation Area	Internal and External

Power (W)	Current (mA)	CCT (K)	Lumen (lm)
14	90	3000 Warm White	1700
14	90	4000 Cool White	1800
14	90	6500 Day Light	1700
17	109	3000 Warm White	2000
17	109	4000 Cool White	2200
17	109	6500 Day Light	2000
21	122	3000 Warm White	2400
21	122	4000 Cool White	2600
21	122	6500 Day Light	2400
24	130	3000 Warm White	2700
24	130	4000 Cool White	3000
24	130	6500 Day Light	2700

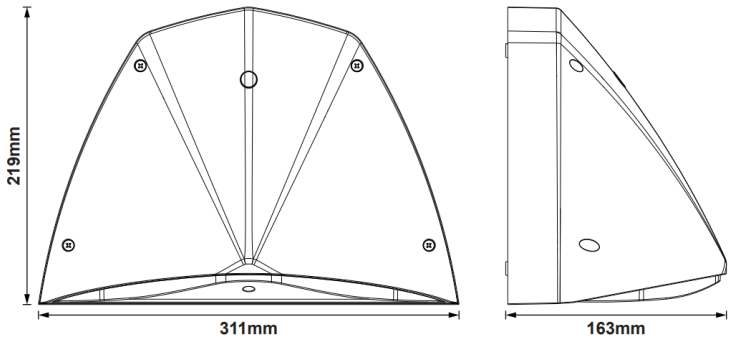

Tel: 01635 523 713
Email: sales@kosnic.com
Kosnic.com
Kosnic Lighting KosnicUK KosnicLightingUK KosnicUK