7 Years
Product Warranty
UK Only

Havasu

Kosnic
LIGHTING • SIMPLY BETTER

07982 HAV240-F50

Havasu floodlight, 200-240W watt switch flood 60°x 60° 5000K

- Switchable wattage
- High efficiency up to 190lm/W
- High Power, from 200W to 240W
- Multiple options for optics including asymmetric options
- IP65, IK09
- Flicker free



Overview

The Havasu is a premium high-power floodlight, it has operational life time of over 6 years. With the IP66 rating, wattage switching, range of beam angle options, and high efficiency of 150lm/W, this floodlight can provide a tailored lighting solutions for a long time to come.

IP65

General Information

Ambient Temperature Range (°C)	-30°C to 50°C
IK Rating	IK09
IP Rating	IP65
Protection Rating	Class I
Installation Area	External
L80B10 Lifetime (h) @Ta 25 °C	252,000 h

Compliance

LVD	EN 60598-1:2024, EN 60598-2-5:2015
EMC	EN 55015:2019+A11:2020, EN 61000-3-2:2019+A1:2021, EN 61000-3-3:2013+A1:2019+A2:2021, EN 61547:2023
Others	UKCA, CE, RoHS, WEEE

Technical Summary	
Product Code	HAV240-F50
Input Voltage Supply	120-277Vac 50/60Hz
Inrush Current (peak/duration) (A)	130A/330us
Settable Wattages	200W, 240W
Power Factor	0.95
Default CCT	5,000 K
SDCM of CCT	<6
CRI	70
Dimmable	N
Flicker	<1%
Lumens Output Maximum	40,800 lm
Maximum Efficiency	170 lm/W
L70B50 Lifetime (h) @Ta 25 °C	404,000 h
L80B10 Lifetime (h) @Ta 25 °C	252,000 h
L90B10 Lifetime (h) @Ta 25 °C	118,000 h
Nominal Lifetime (h)	54,000 h
Glow wire temperature(°C)	650
Blue Light Hazard	RG1
Weight	5.95Kg
Dimensions (L x W x D) (mm)	439x483x67
Beam Angle - Lumi (°)	60x60
LS Energy Efficiency Class	C

Tel: 01635 523 713
Email: sales@kosnic.com
Kosnic.com
Kosnic Lighting KosnicUK KosnicLightingUK

7 Years
Product Warranty
UK Only

Havasu

Kosnic
LIGHTING • SIMPLY BETTER

07982 HAV240-F50

Rated Power (W)	Current (mA)	Total Lumen Flux (lm)
200	915	34000
240	1098	40800

Overview

The Havasu is a premium high-power floodlight, it has operational life time of over 6 years. With the IP66 rating, wattage switching, range of beam angle options, and high efficiency of 150lm/W, this floodlight can provide a tailored lighting solutions for a long time to come.

IP65

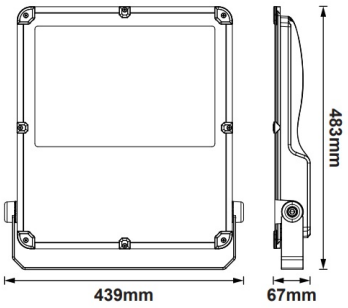

HAV240-xx

General Information

Ambient Temperature Range (°C)	-30°C to 50°C
IK Rating	IK09
IP Rating	IP65
Nominal Lifetime (h)	54,000 h
Protection Rating	Class I
Installation Area	External

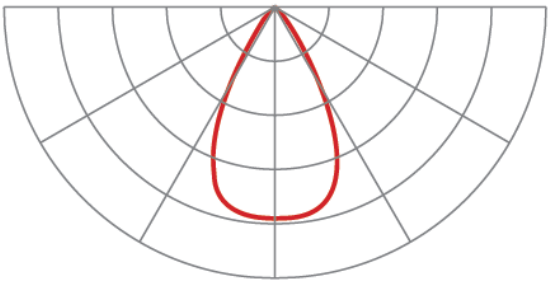

60° x 60°

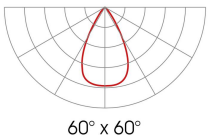

60° x 60°

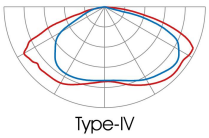

Type-IV

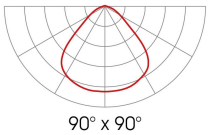

90° x 90°

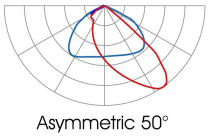

Asymmetric 50°

Tel: 01635 523 713
Email: sales@kosnic.com
Kosnic.com

Kosnic Lighting KosnicUK KosnicLightingUK KosnicUK