5 Years
Product Warranty
UK Only

2 Years
On-Site Warranty
Main-land UK Only

Toba

Kosnic
LIGHTING • SIMPLY BETTER

07654 TOB24-SCT

Toba, 24W CCT switch panel downlight

- Surface or cut-out mounting options
- IP54, suitable for bathroom applications
- Ultra slim profile of only 21.5mm / 25mm
- Switchable CCT 3000K/4000K/6500K
- Unique adjustable mounting bracket
- (cut-out range 65-205mm)
- Long life of 40,000hrs
- IP54, Class II



Overview

The Toba has almost unrivalled flexibility, it's CCT switchable, it has a range of wattage options, adjustable recess and surface mounting options, and can be fitted with an emergency module. This is all with its ultra slim profile and IP54 rating, you will be hard press to find a fitting that can be used in more situations.

IP54

General Information

Ambient Temperature Range (°C)	-20°C to 50°C
IK Rating	IK06
IP Rating	IP54
Protection Rating	Class II
Installation Area	Internal
L80B10 Lifetime (h) @Ta 25 °C	24,000 h

Compliance

LVD	EN 60598-1:2024, EN 60598-2-1:2021, EN 62471:2008, EN 62493:2015+A1:2022
EMC	EN 55015:2019+A11:2020, EN 61000-3-2:2019+A1:2021, EN 61000-3-3:2013+A1:2019+A2:2021, EN 61547:2023
Others	UKCA, CE, RoHS, WEEE

Technical Summary	
Product Code	TOB24-SCT
Input Voltage Supply	220-240Vac 50/60Hz
Inrush Current (peak/duration) (A)	30A/280µs
Default Power	24 W
Power Factor	0.93
Settable Colour Temperatures	3000K, 4000K, 5700K
SDCM of CCT	<6
CRI	82
Dimmable	N
Flicker	<1%
Lumens Output Maximum	2,400 lm
Maximum Efficiency	100 lm/W
L70B50 Lifetime (h) @Ta 25 °C	30,000 h
L80B10 Lifetime (h) @Ta 25 °C	24,000 h
L90B10 Lifetime (h) @Ta 25 °C	11,000 h
Nominal Lifetime (h)	50,000 h
Glow wire temperature(°C)	650
Blue Light Hazard	RG1
Weight	1.1Kg
Dimensions (L x W x D) (mm)	25x∅330
LS Energy Efficiency Class	E

Tel: 01635 523 713
Email: sales@kosnic.com
Kosnic.com
Kosnic Lighting KosnicUK KosnicLightingUK

5 Years
Product Warranty
UK Only

2 Years
On-Site Warranty
Main-land UK Only

Toba

Kosnic
LIGHTING • SIMPLY BETTER

07654 TOB24-SCT

Optional Gear

Product Code	Description	Type
EMPAD01	Neka Emergency Downlight kit 2.5W Manual test	Emergency Module
KBAT2000LFP1	LPF battery standard DD EME, NEKA, Trent OnSite 2ft	Battery
EMPAD01/ST	Neka Emergency Downlight kit 3.5W Self-test	Self-test Emergency Module

CCT (k)	Luminous Flux (lm)
3000	2150
4000	2400
5700	2400

Overview

The Toba has almost unrivalled flexibility, it's CCT switchable, it has a range of wattage options, adjustable recess and surface mounting options, and can be fitted with an emergency module. This is all with its ultra slim profile and IP54 rating, you will be hard press to find a fitting that can be used in more situations.

IP54

General Information

Ambient Temperature Range (°C)	-20°C to 50°C
IK Rating	IK06
IP Rating	IP54
Nominal Lifetime (h)	50,000 h
Protection Rating	Class II
Installation Area	Internal

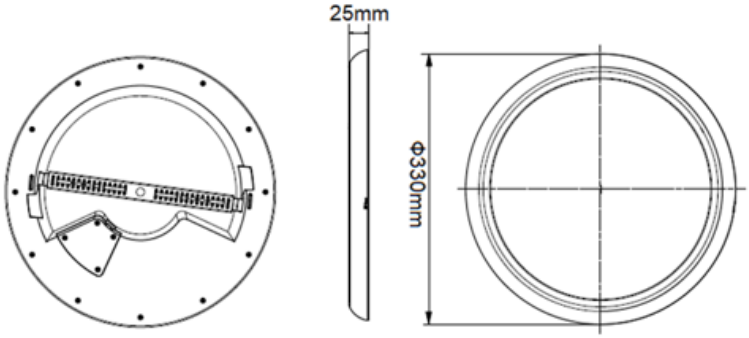

Tel: 01635 523 713
Email: sales@kosnic.com
Kosnic.com
Kosnic Lighting KosnicUK KosnicLightingUK KosnicUK