5 Years
Product Warranty
UK Only

2 Years
On-Site Warranty
Main-land UK Only

Toba

Kosnic
LIGHTING • SIMPLY BETTER

07653 TOB1018-SCT

Toba ultra slim circular LED panel 10-18W CCT switch IP44

- Surface or cut-out mounting options
- IP54, suitable for bathroom applications
- Ultra slim profile of only 21.5mm / 25mm
- Switchable CCT 3000K/4000K/6500K
- Unique adjustable mounting bracket
- (cut-out range 65-205mm)
- Long life of 40,000hrs
- IP54, Class II

Overview

The Toba has almost unrivalled flexibility, it's CCT switchable, it has a range of wattage options, adjustable recess and surface mounting options, and can be fitted with an emergency module. This is all with its ultra slim profile and IP54 rating, you will be hard press to find a fitting that can be used in more situations.



IP44

General Information

Ambient Temperature Range (°C)	-20°C to 50°C
IK Rating	IK04
IP Rating	IP44
Protection Rating	Class II
Installation Area	Internal

Compliance

LVD	EN 60598-1:2024, EN 60598-2-1:2021, EN 62471:2008, EN 62493:2015+A1:2022
EMC	EN 55015:2019+A11:2020, EN 61000-3-2:2019+A1:2021, EN 61000-3-3:2013+A1:2019+A2:2021, EN 61547:2023
Others	UKCA, CE, RoHS, WEEE

Technical Summary	
Product Code	TOB1018-SCT
Input Voltage Supply	220-240Vac 50/60Hz
Inrush Current (peak/duration) (A)	30A 280µs
Settable Wattages	10W, 15W, 18W
Settable Colour Temperatures	3000K, 4000K, 5700K
SDCM of CCT	<6
CRI	82
Dimmable	N
Flicker	<1%
Lumens Output Maximum	1,800 lm
Maximum Efficiency	134 lm/W
L70B50 Lifetime (h) @Ta 25 °C	30,000 h
L80B20 Lifetime (h) @Ta 25 °C	25,000 h
L90B10 Lifetime (h) @Ta 25 °C	11,000 h
Nominal Lifetime (h)	50,000 h
Glow wire temperature(°C)	650
Blue Light Hazard	RG1
Weight	0.5Kg
Dimensions (L x W x D) (mm)	21.5x∅230
Cut-Out (mm)	60-205
LS Energy Efficiency Class	F

Tel: 01635 523 713
Email: sales@kosnic.com
Kosnic.com
Kosnic Lighting KosnicUK KosnicLightingUK

5 Years
Product Warranty
UK Only

2 Years
On-Site Warranty
Main-land UK Only

Toba

Kosnic
LIGHTING • SIMPLY BETTER

07653 TOB1018-SCT

Optional Gear

Product Code	Description	Type
EMPAD01	Neka Emergency Downlight kit 2.5W Manual test	Emergency Module
KBAT2000LFP1	LPF battery standard DD EME, NEKA, Trent OnSite 2ft	Battery
EMPAD01/ST	Neka Emergency Downlight kit 3.5W Self-test	Self-test Emergency Module

Rated Power (W)	CCT (k)	Current (mA)	Power Factor	Total Luminous Flux (lm)
10	3000	48	0.9	1100
10	4000	48	0.9	1200
10	5700	48	0.9	1200
15	3000	70	0.93	1500
15	4000	70	0.93	1600
15	5700	70	0.93	1600
18	3000	112	0.95	1700
18	4000	112	0.95	1800
18	5700	112	0.95	1800

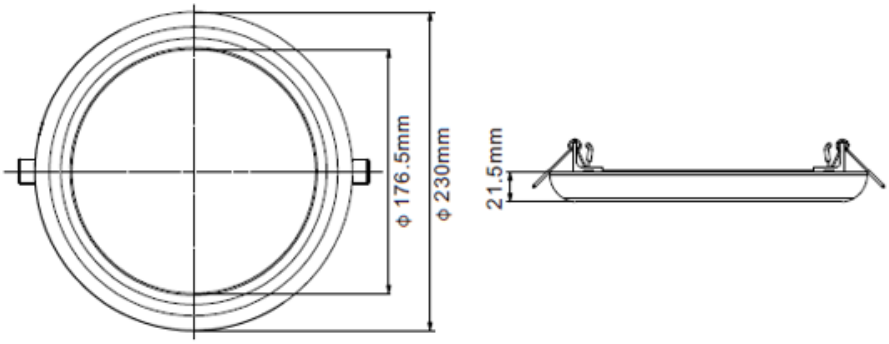

Overview

The Toba has almost unrivalled flexibility, it's CCT switchable, it has a range of wattage options, adjustable recess and surface mounting options, and can be fitted with an emergency module. This is all with its ultra slim profile and IP54 rating, you will be hard press to find a fitting that can be used in more situations.

IP44

General Information

Ambient Temperature Range (°C)	-20°C to 50°C
IK Rating	IK04
IP Rating	IP44
Nominal Lifetime (h)	50,000 h
Protection Rating	Class II
Installation Area	Internal

Tel: 01635 523 713

Email: sales@kosnic.com

Kosnic.com

Kosnic Lighting KosnicUK KosnicLightingUK KosnicUK