3 Years
Product Warranty
UK Only

Tec 2

Kosnic
LIGHTING • SIMPLY BETTER

07578 T04-GUF27

Tec 2 4W GU10 60° 2700K Prismatic

- Save energy up to 85%
- Direct replacement of GU10 halogen lamp
- Great dimming compatibility



Overview

The Kosnic Tec 2 range of LED lamps are perfect for home and hospitality settings, with a range of different CCT available. Direct retrofit for standard halogen GU10 lamps and deliver the same aesthetics and ambient light. Perfect for hospitality settings such as restaurants, bars and hotels where ambience is required.

IP20

General Information

Ambient Temperature Range (°C)	-20°C to 40°C
IP Rating	IP20
Protection Rating	Class II
Installation Area	Internal
L80B10 Lifetime (h) @Ta 25 °C	12,000 h

Compliance

LVD	EN 62493:2015+A1:2022, EN 62560:2012+A11:2019
EMC	EN 55015:2019+A11:2020, EN 61000-3-2:2019+A1:2021, EN 61000-3-3:2013+A1:2019+A2:2021, EN 61547:2023
Others	UKCA, CE, RoHS, WEEE

Technical Summary	
Product Code	T04-GUF27
Input Voltage Supply	220-240Vac 50/60Hz
Inrush Current (peak/duration) (A)	3.5A/190us
Default Power	4 W
Power Factor	0.5
Default CCT	2,700 K
SDCM of CCT	<6
Dimmable	N
Flicker	<1%
Lumens Output Maximum	450 lm
Maximum Efficiency	113 lm/W
L70B50 Lifetime (h) @Ta 25 °C	25,000 h
L80B10 Lifetime (h) @Ta 25 °C	12,000 h
L90B10 Lifetime (h) @Ta 25 °C	6,000 h
Nominal Lifetime (h)	25,000 h
Glow wire temperature(°C)	650
Blue Light Hazard	RG1
Weight	0.046Kg
Dimensions (L x W x D) (mm)	53x∅50
Beam Angle - Lumi (°)	60
LS Energy Efficiency Class	E

Tel: 01635 523 713
Email: sales@kosnic.com
Kosnic.com
Kosnic Lighting KosnicUK KosnicLightingUK

3 Years
Product Warranty
UK Only

Tec 2

Kosnic
LIGHTING • SIMPLY BETTER

07578 T04-GUF27

Overview

The Kosnic Tec 2 range of LED lamps are perfect for home and hospitality settings, with a range of different CCT available. Direct retrofit for standard halogen GU10 lamps and deliver the same aesthetics and ambient light. Perfect for hospitality settings such as restaurants, bars and hotels where ambience is required.

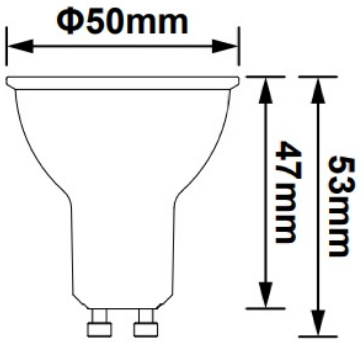

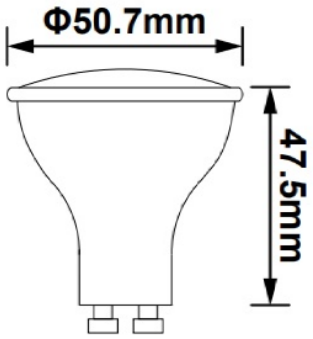

IP20

General Information

Ambient Temperature Range (°C)	-20°C to 40°C
IP Rating	IP20
Nominal Lifetime (h)	25,000 h
Protection Rating	Class II
Installation Area	Internal

Tel: 01635 523 713

Email: sales@kosnic.com

Kosnic.com

Kosnic Lighting KosnicUK KosnicLightingUK KosnicUK