3 Years
Product Warranty
UK Only

# Tec 2

Kosnic
LIGHTING • SIMPLY BETTER

07577 T04-GUS65

## Tec 2 4W GU10 36° 6500K Prismatic

- Save energy up to 85%
- Direct replacement of GU10 halogen lamp
- Great dimming compatibility



## Overview

The Kosnic Tec 2 range of LED lamps are perfect for home and hospitality settings, with a range of different CCT available. Direct retrofit for standard halogen GU10 lamps and deliver the same aesthetics and ambient light. Perfect for hospitality settings such as restaurants, bars and hotels where ambience is required.

IP20

## General Information

| | |
|---|---|
| Ambient Temperature Range (°C) | -20°C to 40°C |
| IP Rating | IP20 |
| Protection Rating | Class II |
| Installation Area | Internal |
| L80B10 Lifetime (h) @Ta 25 °C | 12,000 h |

## Compliance

| | |
|---|---|
| LVD | EN 62493:2015+A1:2022, EN 62560:2012+A11:2019 |
| EMC | EN 55015:2019+A11:2020, EN 61000-3-2:2019+A1:2021, EN 61000-3-3:2013+A1:2019+A2:2021, EN 61547:2023 |
| Others | UKCA, CE, RoHS, WEEE |

| Technical Summary | |
|---|---|
| Product Code | T04-GUS65 |
| Input Voltage Supply | 220-240Vac 50/60Hz |
| Inrush Current (peak/duration) (A) | 3.5A/190us |
| Default Power | 4 W |
| Power Factor | 0.5 |
| Default CCT | 6,500 K |
| SDCM of CCT | <6 |
| Dimmable | N |
| Flicker | <1% |
| Lumens Output Maximum | 450 lm |
| Maximum Efficiency | 113 lm/W |
| L70B50 Lifetime (h) @Ta 25 °C | 25,000 h |
| L80B10 Lifetime (h) @Ta 25 °C | 12,000 h |
| L90B10 Lifetime (h) @Ta 25 °C | 6,000 h |
| Nominal Lifetime (h) | 25,000 h |
| Glow wire temperature(°C) | 650 |
| Blue Light Hazard | RG1 |
| Weight | 0.046Kg |
| Dimensions (L x W x D) (mm) | 53x∅50 |
| Beam Angle - Lumi (°) | 36 |
| LS Energy Efficiency Class | E |

Tel: 01635 523 713
Email: sales@kosnic.com
Kosnic.com
Kosnic Lighting KosnicUK KosnicLightingUK

3 Years
Product Warranty
UK Only

# Tec 2

Kosnic
LIGHTING • SIMPLY BETTER

07577 T04-GUS65

## Overview

The Kosnic Tec 2 range of LED lamps are perfect for home and hospitality settings, with a range of different CCT available. Direct retrofit for standard halogen GU10 lamps and deliver the same aesthetics and ambient light. Perfect for hospitality settings such as restaurants, bars and hotels where ambience is required.

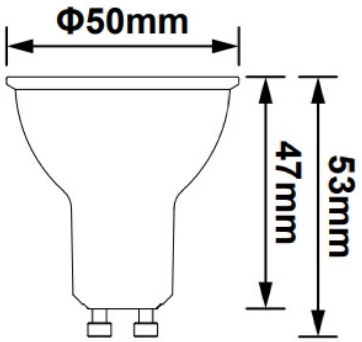


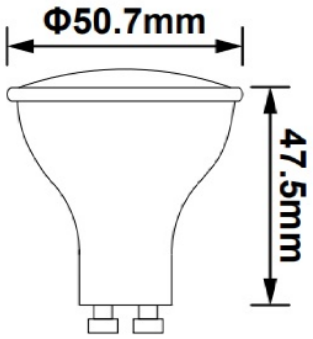


IP20

## General Information

| | |
|---|---|
| Ambient Temperature Range (°C) | -20°C to 40°C |
| IP Rating | IP20 |
| Nominal Lifetime (h) | 25,000 h |
| Protection Rating | Class II |
| Installation Area | Internal |


Tel: 01635 523 713

Email: sales@kosnic.com

Kosnic.com

Kosnic Lighting KosnicUK KosnicLightingUK KosnicUK