7 Years
Product Warranty
UK Only

Telica 2

Kosnic
LIGHTING • SIMPLY BETTER

07156 TEL210-WHT

Telica 2 firerated antiglare DL CCT switch DIM 10W white

- Dimmable driver included
- Interchangeable reflectors with different finishes
- Anti-glare reflectors available
- Switchable colour temperature 3000K/4000K/6000K
- IP65, Class II





Overview

The Telica fire rated downlight is a mains dimmable that can be fitted with a range of bezels. Beneath the bezel you will find the CCT switch with three options, this combined with the mains dimming and range of bezels and IP65 rating makes the Telica II suitable for a range of applications.

III IP65

General Information

Ambient Temperature Range (°C)	-15°C to 50°C
IK Rating	IK07
IP Rating	IP65
Protection Rating	Class III
Installation Area	Internal
L80B10 Lifetime (h) @Ta 25 °C	50,000 h

Compliance

LVD	EN 60598-1:2024, EN 60598-2-2:2012, EN 62493:2015+A1:2022
EMC	EN 55015:2019+A11:2020, EN 61000-3-2:2019+A1:2021, EN 61000-3-3:2013+A1:2019+A2:2021, EN 61547:2023
Others	UKCA, CE, RoHS, WEEE

Technical Summary	
Product Code	TEL210-WHT
Input Voltage Supply	220-240Vac 50/60Hz
Inrush Current (peak/duration) (A)	5A/350µs
Fire Rating	30m I Joist, 60m I Joist, 90m Solid Joist
Default Power	10 W
Driver Code/Part number	MHDR-002
Driver Maximum Power (W)	10
Driver Output Current (mA)	310
Power Factor	0.9
Driver Power Factor	0.9
Settable Colour Temperatures	3000K, 4000K, 6000K
SDCM of CCT	<6
CRI	82
Dimmable	N
Flicker	0.20%
Lumens Output Maximum	980 lm
Maximum Efficiency	98 lm/W
L70B50 Lifetime (h) @Ta 25 °C	50,000 h
L80B10 Lifetime (h) @Ta 25 °C	50,000 h
L90B10 Lifetime (h) @Ta 25 °C	37,000 h
Nominal Lifetime (h)	50,000 h
Glow wire temperature(°C)	650
Blue Light Hazard	RG1
Weight	0.276Kg
Dimensions (L x W x D) (mm)	69x∅80
Cut-Out (mm)	∅70mm
Ceiling Void (mm)	67 mm
Beam Angle - Lumi (°)	40

Tel: 01635 523 713
Email: sales@kosnic.com
Kosnic.com
Kosnic Lighting KosnicUK KosnicLightingUK

7 Years
Product Warranty
UK Only

Telica 2

Kosnic
LIGHTING • SIMPLY BETTER

07156 TEL210-WHT

Overview

The Telica fire rated downlight is a mains dimmable that can be fitted with a range of bezels. Beneath the bezel you will find the CCT switch with three options, this combined with the mains dimming and range of bezels and IP65 rating makes the Telica II suitable for a range of applications.

III IP65

General Information

Ambient Temperature Range (°C)	-15°C to 50°C
IK Rating	IK07
IP Rating	IP65
Nominal Lifetime (h)	50,000 h
Protection Rating	Class III
Installation Area	Internal

Optional Gear

Product Code	Description	Type
CYDIMRFT1	Easylink RF controlled AC triac wireless dimmer	Dimmable Driver
EMPAD01	Neka Emergency Downlight kit 2.5W Manual test	Emergency Module
EMPAD01/ST	Neka Emergency Downlight kit 3.5W Self-test	Self-test Emergency Module

Accessories

Product Code	Description	Type
TELRE-BSLV	Telica 2 interchangeable black bezel & silver reflector	Bezel
TELRE-BBAS	Telica 2 interchangeable black bezel & brass reflector	Bezel
TELRE-BBLK	Telica 2 interchangeable black bezel and black reflector	Bezel
TELRE-BRED	Telica 2 interchangeable black bezel & red reflector	Bezel
TELRE-WSLV	Telica 2 Interchangeable white bezel & Silver reflector	Bezel
TELRE-WBAS	Telica 2 Interchangeable white bezel & brass reflector	Bezel
TELRE-WBLK	Telica 2 interchangeable white bezel & black reflector	Bezel
TELRE-WRED	Telica 2 Interchangeable white bezel & red reflector	Bezel

Settable (Default in Bold)	**Variable**							
Rated Power (W)	**CCT (K)**	**Total Luminous Flux (lm)**	**LS Energy Efficiency Class**	**LS Useful Luminous Flux (lm)**	**LS Chromaticity Co-Ordinates (X)**	**LS Chromaticity Co-Ordinates (Y)**	**LS Peak Luminous Intensity (DLS) (cd)**	**LS R9 CRI (LED/OLED)**
10	3000	900	F	830	0.447	0.405	1650	5
10	**4000**	**980**	**E**	**900**	**0.375**	**0.368**	**1900**	**21**
10	6000	900	F	830	0.316	0.338	1650	8

Tel: 01635 523 713
Email: sales@kosnic.com
Kosnic.com
Kosnic Lighting KosnicUK KosnicLightingUK KosnicUK

7 Years
Product Warranty
UK Only

Telica 2

Kosnic
LIGHTING • SIMPLY BETTER

07156 TEL210-WHT

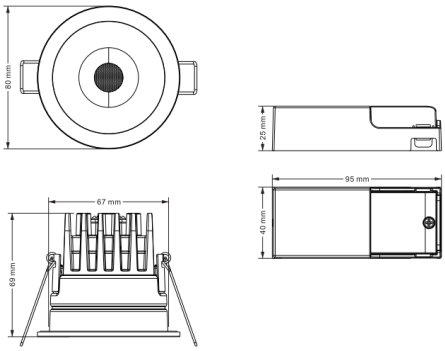

Overview

The Telica fire rated downlight is a mains dimmable that can be fitted with a range of bezels. Beneath the bezel you will find the CCT switch with three options, this combined with the mains dimming and range of bezels and IP65 rating makes the Telica II suitable for a range of applications.

III IP65

General Information

Ambient Temperature Range (°C)	-15°C to 50°C
IK Rating	IK07
IP Rating	IP65
Nominal Lifetime (h)	50,000 h
Protection Rating	Class III
Installation Area	Internal

Tel: 01635 523 713

Email: sales@kosnic.com

Kosnic.com

Kosnic Lighting KosnicUK KosnicLightingUK KosnicUK