5 Years
Product Warranty
UK Only

2 Years
On-Site Warranty
Main-land UK Only

Faceta

Kosnic
LIGHTING • SIMPLY BETTER

07071 FAC4IN10-SCT

Faceta 4 inch 6/10W Downlight CCT switchable

- IP65 when ceiling recess mounted
- Optional drop-down diffusers for KCDL2622FR65
- Unique faceted white reflector
- Low glare
- Flicker free
- Optional DALI, 1-10V (0-10V) driver (FAC8IN26-SCT)
- Option of CCT switching 3000K, 4000K, 5000K

Overview

The Faceta LED Commercial Downlight range are retrofit LED lighting for widely used 3", 4", 6" and 8" fluorescent downlights with a distinctive faceted white reflector and a recessed light source. Available with a switchable CCT and the downlights are compatible with Kosnic's emergency module.



III IP65

General Information

Ambient Temperature Range (°C)	-20°C to 50°C
IP Rating	IP65
Protection Rating	Class III
Installation Area	Internal

Compliance

LVD	EN 60598-1:2024, EN 60598-2-1:2021, EN 62031:2020, EN 62493:2015+A1:2022
EMC	EN 55015:2019+A11:2020, EN 61000-3-2:2019+A1:2021, EN 61000-3-3:2013+A1:2019+A2:2021, EN 61547:2023
Others	UKCA, CE, RoHS, WEEE

Technical Summary	
Product Code	FAC4IN10-SCT
Input Voltage Supply	220-240Vac 50/60Hz
Settable Wattages	6W, 10W
Driver Code/Part number	CYC015SNL16-35N (DR15C1635)
Driver Output Current (mA)	160/350
Power Factor	0.95
Driver Power Factor	>0.9
Settable Colour Temperatures	3000K, 4000K, 5000K
SDCM of CCT	<6
CRI	>80
Dimmable	Specific Dimmer
Lumens Output Maximum	600 lm
Maximum Efficiency	60 lm/W
Maintained Luminous Flux	250 lm
Nominal Lifetime (h)	50,000 h
Weight	0.35Kg
Dimensions (L x W x D) (mm)	84x∅151
Cut-Out (mm)	∅111mm
Beam Angle - Lumi (°)	80

Tel: 01635 523 713
Email: sales@kosnic.com
Kosnic.com
Kosnic Lighting KosnicUK KosnicLightingUK

5 Years
Product Warranty
UK Only

2 Years
On-Site Warranty
Main-land UK Only

Faceta

Kosnic
LIGHTING • SIMPLY BETTER

07071 FAC4IN10-SCT

Optional Gear

Product Code	Description	Type
UEM03/ST	Universal Emergency Module 3W Self Test	Self-test Emergency Module
UEM03	Universal Emergency Module 3W	Emergency Module
DRC20/DA	DALI-2 Dimmable Driver 20W Push dimming	Dimmable Driver
EMPAD01	Neka Emergency Downlight kit 2.5W Manual test	Emergency Module
EMPAD01/ST	Neka Emergency Downlight kit 3.5W Self-test	Self-test Emergency Module

Overview

The Faceta LED Commercial Downlight range are retrofit LED lighting for widely used 3", 4", 6" and 8" fluorescent downlights with a distinctive faceted white reflector and a recessed light source. Available with a switchable CCT and the downlights are compatible with Kosnic's emergency module.

III IP65

Rated Power (W)	Current (mA)	CCT (K)	Lumen (lm)
6	30	3000	300
6	30	4000	330
6	30	5000	330
10	46	3000	550
10	46	4000	600
10	46	5000	600

General Information

Ambient Temperature Range (°C)	-20°C to 50°C
IP Rating	IP65
Nominal Lifetime (h)	50,000 h
Protection Rating	Class III
Installation Area	Internal

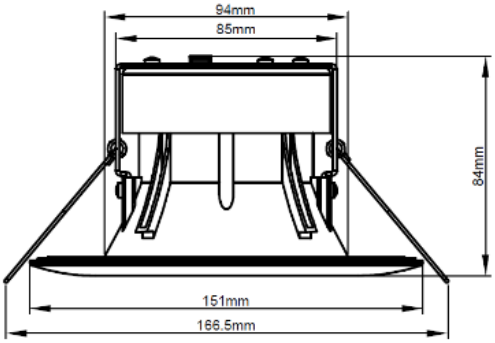

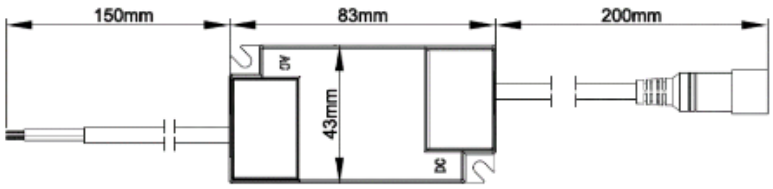



Tel: 01635 523 713
Email: sales@kosnic.com
Kosnic.com
Kosnic Lighting KosnicUK KosnicLightingUK KosnicUK