7 Years
Product Warranty
UK Only

Etna

Kosnic
LIGHTING • SIMPLY BETTER

07006 ETNDD-LID-BLK

Etna-DD, diecast aluminium LED bulkhead, eyelid trim Black

- Optional plug-in microwave corridor sensor compatible with Uni-Remote
- Optional plug-in DALI conversion module
- Optional plug-in emergency modules, available in manual, self-test and DALI
- Die-cast aluminium body
- Anti-corrosion
- BESA box fitting points
- IP65 and vandal resistant (IK10)



Overview

The Etna LED DD black aluminium finishing Bulkhead offers a low maintenance and robust solution to lighting in corridors, staircases and security zones. With an opal diffuser and IP65 rating. It is exclusively for use with Kosnic LED DD lamps. Available with or without microwave sensors and emergency module option.

IP65

General Information

Ambient Temperature Range (°C)	-20°C to 40°C
IK Rating	IK10
IP Rating	IP65
Materials	Diecast aluminium
Protection Rating	Class I
Installation Area	Internal and External

Technical Summary	
Product Code	ETNDD-LID-BLK
Input Voltage Supply	220-240Vac 50/60Hz
Weight	2.35Kg
Dimensions (L x W x D) (mm)	94x∅360
BESA Entry	True

Compliance

LVD	EN 60598-1:2024
Others	UKCA, CE, RoHS, WEEE

Tel: 01635 523 713
Email: sales@kosnic.com
Kosnic.com
Kosnic Lighting KosnicUK KosnicLightingUK

7 Years
Product Warranty
UK Only

Etna

Kosnic
LIGHTING • SIMPLY BETTER

07006 ETNDD-LID-BLK

Optional Gear

Product Code	Description	Type
EMDD02/ST	2W self-test emergency module for LED DD and bulkhead	Self-test Emergency Module
EMDD02	2W standard emergency module for LED DD and bulkhead	Emergency Module
K2DC9-18CRD/4P-SCT	K2D DD Motion Sensor 9/12/18W GR10q 3000/4000/5000K Clear	
K2DC9-18STD/4P-SCT	K2D DD Standard 9/12/18W GR10q 3000/4000/5000K Clear	

Overview

The Etna LED DD black aluminium finishing Bulkhead offers a low maintenance and robust solution to lighting in corridors, staircases and security zones. With an opal diffuser and IP65 rating. It is exclusively for use with Kosnic LED DD lamps. Available with or without microwave sensors and emergency module option.

IP65

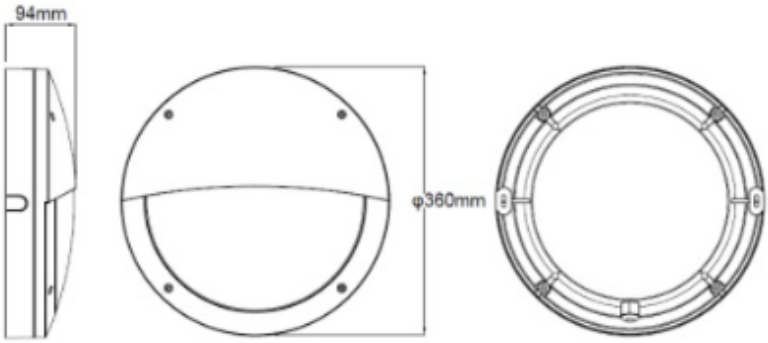

General Information

Ambient Temperature Range (°C)	-20°C to 40°C
IK Rating	IK10
IP Rating	IP65
Materials	Diecast aluminium
Protection Rating	Class I
Installation Area	Internal and External

Tel: 01635 523 713
Email: sales@kosnic.com
Kosnic.com
Kosnic Lighting KosnicUK KosnicLightingUK KosnicUK