3 Years
Product Warranty
UK Only

Pico

Kosnic
LIGHTING • SIMPLY BETTER

06993 PIC-38

Pico-DD, LED bulkhead, 380mm, for all 4-pin LED DD lamps

- Optional plug-in microwave corridor sensor compatible with Uni-Remote
- Optional plug-in DALI conversion module
- Optional plug-in emergency module, available in manual, self-test and DALI
- Twist & lock fast installation
- IP44
- Choice of optional interchangeable rings in various finishes





Overview

The Pico bulkhead for DD lamps is IP44 rated when ceiling mounted and with high LOR. The medium and large sized can be easily converted for emergency use by installing the optional standard or self-test emergency modules. The small bulkhead is only suitable for Kosnic 9W LED DD lamps and cannot be converted for emergency use.

IP44

General Information

Ambient Temperature Range (°C)	-20°C to 40°C
IP Rating	IP44
Protection Rating	Class I
Installation Area	Internal

Technical Summary	
Product Code	PIC-38
Input Voltage Supply	220-240Vac 50/60Hz
Weight	0.64Kg
Dimensions (L x W x D) (mm)	110x380

Compliance

LVD	EN 60598-1:2024, EN 60598-2-1:2021
Others	UKCA, CE, RoHS, WEEE

Tel: 01635 523 713
Email: sales@kosnic.com
Kosnic.com
Kosnic Lighting KosnicUK KosnicLightingUK

3 Years
Product Warranty
UK Only

Pico

Kosnic
LIGHTING • SIMPLY BETTER

06993 PIC-38

Optional Gear

Product Code	Description	Type
DD18CRD/4P-SCT	DD Motion Sensor 4pin 18W GR10q 2700/4000/6500K Clear	
DD18/4P-SCT	DD Standard 4pin 18W GR10q 2700/4000/6500K Clear	
EMDD202/SST	DD EME 2 Duo 2W emergency module for LED DD and bulkhead	Emergency Module
EMDD202/DA	DD EME 2 DALI-2 2W & Self-test emergency module	Emergency Module
LUL-M/D	Lulu Plug in microwave motion and daylight sensor 12V DC	Microwave Sensor
POL2-MWS	Plug-in ON/OFF Microwave Sensor	Microwave Sensor
TBX/DT5	Tarr Bridge Box DALI-2 DT5 Conversion Box	Conversion Box

Accessories

Product Code	Description	Type
PICT-WHT	Pico & Pico-i, decorative trims, white	Trim
PICT-BAS	Pico & Pico-i, decorative trims, brass	Trim
PICT-SCH	Pico & Pico-i, decorative trims, satin chrome	Trim
PICT-CHM	Pico & Pico-i, decorative trims, chrome	Trim
RMT-UNI	Universal Remote Control for Kosnic motion sensors	Remote Control

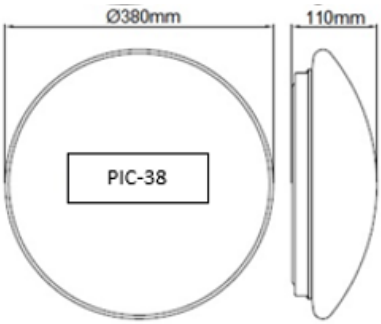

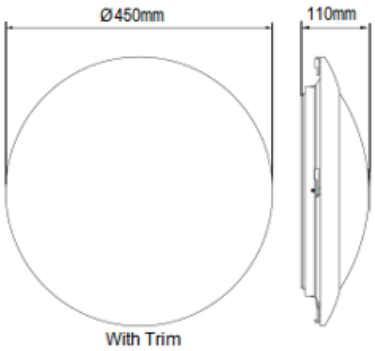

Overview

The Pico bulkhead for DD lamps is IP44 rated when ceiling mounted and with high LOR. The medium and large sized can be easily converted for emergency use by installing the optional standard or self-test emergency modules. The small bulkhead is only suitable for Kosnic 9W LED DD lamps and cannot be converted for emergency use.

IP44

General Information

Ambient Temperature Range (°C)	-20°C to 40°C
IP Rating	IP44
Protection Rating	Class I
Installation Area	Internal

Tel: 01635 523 713

Email: sales@kosnic.com

Kosnic.com

Kosnic Lighting KosnicUK KosnicLightingUK KosnicUK