5 Years
Product Warranty
UK Only

Vida

Kosnic
LIGHTING • SIMPLY BETTER

06913 VID4IN06

Vida backlit 4 inch slim downlight 6W CCT switchable

- Slim profile
- Surface mount kits are available
- CCT switching 3000K/4000K/6500K
- Loop-in & loop-out push-wire connector is included



Overview

The Vida LED downlight panel comes in three sizes each with CCT switching for 3000K, 4000K and 6500K. With its slim profile and push wire terminal block installation in shallow ceiling voids is no issue. The Vida can optionally be surface mounted or mounted with an emergency kit.

IP20

General Information

Ambient Temperature Range (°C)	-20°C to 50°C
IK Rating	IK04
IP Rating	IP20
Protection Rating	Class II
Installation Area	Internal
L80B10 Lifetime (h) @Ta 25 °C	54,000 h

Compliance

LVD	EN 60598-1:2024, EN 60598-2-2:2012, EN 61347-1:2015+A1:2021, EN 61347-2-13:2014+A1:2017, EN 62031:2020
EMC	EN 55015:2019+A11:2020, EN 61000-3-2:2019+A1:2021, EN 61000-3-3:2013+A1:2019+A2:2021, EN 61547:2023
Others	UKCA, CE, RoHS, WEEE

Technical Summary	
Product Code	VID4IN06
Input Voltage Supply	220-240Vac 50/60Hz
Inrush Current (peak/duration) (A)	9.8A/5µs
Default Power	6 W
Power Factor	0.80
Settable Colour Temperatures	3000K, 4000K, 6500K
SDCM of CCT	<6
CRI	≥82
Dimmable	N
Flicker	<2%
Lumens Output Maximum	500 lm
Maximum Efficiency	83 lm/W
L70B50 Lifetime (h) @Ta 25 °C	54,000 h
L80B10 Lifetime (h) @Ta 25 °C	54,000 h
L90B10 Lifetime (h) @Ta 25 °C	36,000 h
Nominal Lifetime (h)	50,000 h
Glow wire temperature(°C)	650
Blue Light Hazard	RG1
Weight	0.09Kg
Dimensions (L x W x D) (mm)	37x∅116
Cut-Out (mm)	∅105mm
LS Energy Efficiency Class	E

Tel: 01635 523 713
Email: sales@kosnic.com
Kosnic.com
Kosnic Lighting KosnicUK KosnicLightingUK

5 Years
Product Warranty
UK Only

Vida

Kosnic
LIGHTING • SIMPLY BETTER

06913 VID4IN06

Overview

The Vida LED downlight panel comes in three sizes each with CCT switching for 3000K, 4000K and 6500K. With its slim profile and push wire terminal block installation in shallow ceiling voids is no issue. The Vida can optionally be surface mounted or mounted with an emergency kit.

IP20

General Information

Ambient Temperature Range (°C)	-20°C to 50°C
IK Rating	IK04
IP Rating	IP20
Nominal Lifetime (h)	50,000 h
Protection Rating	Class II
Installation Area	Internal

Optional Gear

Product Code	Description	Type
EMPAD01	Neka Emergency Downlight kit 2.5W Manual test	Emergency Module
EMPAD01/ST	Neka Emergency Downlight kit 3.5W Self-test	Self-test Emergency Module

Accessories

Product Code	Description	Type
VID4IN-SMT	Vida 4 inch surface mount frame for 6W DL	Mount Frame

Settable (Default in Bold)	**Variable**					
Rated Power (W)	**CCT (K)**	**Total Luminous Flux (lm)**	**LS Useful Luminous Flux (lm)**	**LS Chromaticity Co-Ordinates (X)**	**LS Chromaticity Co-Ordinates (Y)**	**LS R9 CRI (LED/OLED)**
6	3000	450	720	0.4328	0.3944	1
6	**4000**	**500**	**780**	**0.3676**	**0.3568**	**21**
6	6500	450	720	0.3066	0.3217	5

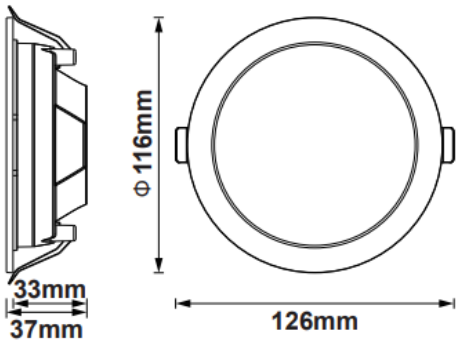

Tel: 01635 523 713
Email: sales@kosnic.com
Kosnic.com
Kosnic Lighting KosnicUK KosnicLightingUK KosnicUK