7 Years
Product Warranty
UK Only

2 Years
On-Site Warranty
Main-land UK Only

Meola

Kosnic
LIGHTING • SIMPLY BETTER

06839 MEO25-SCT/ES

Meola, large LED bulkhead DIM 25W IP65 SCT EME & sensor

- Diameter of 420mm
- Option of base with emergency module
- IP65 and vandal resistant (IK10)
- Integrated LED board for uniform light output
- High lumen output of up to 4000lm
- Flicker free
- DALI 3 in1 Dimmable version available
- Switchable CCT (3000K/4000K/5000K)





Overview

The Meola Bulkhead comes with an integrated LED board for uniform light output and switchable CCT. DALI/1-10v/Push dimmable version available. Microwave sensor and emergency versions are also available. With IP65 and IK10 rated for outdoor use and vandal resistant. The bulkhead offers a simple and elegant solution.

IP65

General Information

Ambient Temperature Range (°C)	-20°C to 50°C
IK Rating	IK10
IP Rating	IP65
Protection Rating	Class II
Installation Area	Internal and External
L80B10 Lifetime (h) @Ta 25 °C	43,000 h

Compliance

LVD	EN 60598-1:2024, EN 60598-2-1:2021, EN 62493:2015+A1:2022
EMC	EN 55015:2019+A11:2020, EN 61000-3-2:2019+A1:2021, EN 61000-3-3:2013+A1:2019+A2:2021, EN 61547:2023
Others	UKCA, CE, RoHS, WEEE

Technical Summary	
Product Code	MEO25-SCT/ES
Input Voltage Supply	220-240Vac 50/60Hz
Inrush Current (peak/duration) (A)	19.2A/256µs
Default Power	25 W
Power Factor	0.90
Settable Colour Temperatures	3000K, 4000K, 5000K
SDCM of CCT	<6
CRI	≥82
Dimmable	N
Flicker	0.01%
Lumens Output Maximum	2,500 lm
Maximum Efficiency	100 lm/W
Emergency Luminous Flux	400 lm
L70B50 Lifetime (h) @Ta 25 °C	54,000 h
L80B10 Lifetime (h) @Ta 25 °C	43,000 h
L90B10 Lifetime (h) @Ta 25 °C	21,000 h
Nominal Lifetime (h)	50,000 h
Glow wire temperature(°C)	650
Blue Light Hazard	RG1
Weight	1.59Kg
Dimensions (L x W x D) (mm)	85x∅420
LS Energy Efficiency Class	D

Tel: 01635 523 713

Email: sales@kosnic.com

Kosnic.com

Kosnic Lighting KosnicUK KosnicLightingUK

7 Years
Product Warranty
UK Only

2 Years
On-Site Warranty
Main-land UK Only

Meola

Kosnic
LIGHTING • SIMPLY BETTER

06839 MEO25-SCT/ES

Accessories

Product Code	Description	Type
SUS04	LED Panel & Slim Line 2 suspension kit (4 cables per bag)	Suspension Kit
SUS04/25	Suspension kit 2.5m Alden & Nevis & Slim Line 2 (4 cables per bag)	Suspension Kit

Overview

The Meola Bulkhead comes with an integrated LED board for uniform light output and switchable CCT. DALI/1-10v/Push dimmable version available. Microwave sensor and emergency versions are also available. With IP65 and IK10 rated for outdoor use and vandal resistant. The bulkhead offers a simple and elegant solution.

IP65

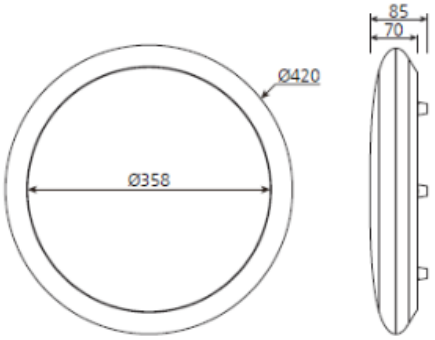

General Information

Ambient Temperature Range (°C)	-20°C to 50°C
IK Rating	IK10
IP Rating	IP65
Nominal Lifetime (h)	50,000 h
Protection Rating	Class II
Installation Area	Internal and External

Tel: 01635 523 713

Email: sales@kosnic.com

Kosnic.com

Kosnic Lighting KosnicUK KosnicLightingUK KosnicUK