3 Years
Product Warranty
UK Only

Swimley

Kosnic
LIGHTING • SIMPLY BETTER

06582 SWIC/GU10

Swimley Twin 7W GU10 Up/Down wall light Circular base Standard

- Grade 304 stainless steel and toughened glass
- IP44
- Finishing of stainless steel, grey and black models with integrated PIR sensor



Overview

The Kosnic Swimley wall lights are suitable for outdoor use with integrated PIR sensor options. The wall lights are made from Grade 304 stainless steel and toughened glass. Available in stainless steel, grey and black finishings. Swimley offers a simple decorative solution wherever outdoor wall lighting is required.

IP44

Technical Summary	
Product Code	SWIC/GU10
Input Voltage Supply	220-240Vac 50/60Hz
Weight	0.32Kg
Dimensions (L x W x D) (mm)	90x85x160

General Information

Ambient Temperature Range (°C)	-20°C to 50°C
IP Rating	IP44
Protection Rating	Class I
Installation Area	Internal and External

Compliance

LVD	EN 60598-1:2024, EN 60598-2-1:2021, EN 62493:2015+A1:2022
Others	UKCA, CE, RoHS, WEEE

Tel: 01635 523 713
Email: sales@kosnic.com
Kosnic.com
Kosnic Lighting KosnicUK KosnicLightingUK

3 Years
Product Warranty
UK Only

Swimley

Kosnic
LIGHTING • SIMPLY BETTER

06582 SWIC/GU10

Overview

The Kosnic Swimley wall lights are suitable for outdoor use with integrated PIR sensor options. The wall lights are made from Grade 304 stainless steel and toughened glass. Available in stainless steel, grey and black finishings. Swimley offers a simple decorative solution wherever outdoor wall lighting is required.

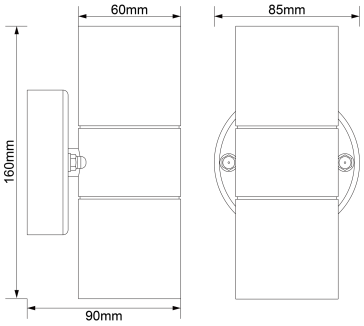

IP44

General Information

Ambient Temperature Range (°C)	-20°C to 50°C
IP Rating	IP44
Protection Rating	Class I
Installation Area	Internal and External

Tel: 01635 523 713

Email: sales@kosnic.com

Kosnic.com

Kosnic Lighting KosnicUK KosnicLightingUK KosnicUK