5 Years
Product Warranty
UK Only

Telica Tilt

Kosnic
LIGHTING • SIMPLY BETTER

06327 TEL10TW-WHT

TelicaTilt firerated downlight CCT switch DIM 10W white

- Dimmable driver included
- Switchable colour temperature 2700K/4000K/6000K
- Interchangeable magnetic bezels with different finishes
- Versions of black and white anti-glare reflectors





Overview

The Kosnic Telica Tilt tilting 10W dimmable fire rated downlights are suitable for 30, 60 and 90 minute applications. These compact downlights can be dimmed with mains dimmer switches and have a switchable CCT. There is a choice of interchangeable magnetic bezels with different finishes and a recessed anti-glare rim.

III IP44

General Information

Ambient Temperature Range (°C)	-20°C to 50°C
IK Rating	IK07
IP Rating	IP44
Protection Rating	Class III
Installation Area	Internal

Compliance

LVD	EN 60598-1:2024, EN 60598-2-2:2012, EN 62493:2015+A1:2022
EMC	EN 55015:2019+A11:2020, EN 61000-3-2:2019+A1:2021, EN 61000-3-3:2013+A1:2019+A2:2021, EN 61547:2023
Others	UKCA, CE, RoHS, WEEE

Technical Summary	
Product Code	TEL10TW-WHT
Input Voltage Supply	220-240 Vac 50/60Hz
Inrush Current (peak/duration) (A)	15A 150µs
Fire Rating	90m Solid Joist, 30m Solid Joist, 60m Solid Joist
Default Power	10 W
Driver Code/Part number	CYC009STC024
Driver Maximum Power (W)	9
Driver Output Current (mA)	240
Power Factor	0.95
Driver Power Factor	≥ 0.90
Settable Colour Temperatures	2700K, 4000K, 6000K
CRI	82
Dimmable	Y
Lumens Output Maximum	790 lm
Maximum Efficiency	79 lm/W
L70B50 Lifetime (h) @Ta 25 °C	50,000 h
L80B20 Lifetime (h) @Ta 25 °C	50,000 h
Glow wire temperature(°C)	650
Blue Light Hazard	RG1
Weight	0.29Kg
Dimensions (L x W x D) (mm)	61x∅95
Cut-Out (mm)	81
Beam Angle - Lumi (°)	36
LS Energy Efficiency Class	F

Tel: 01635 523 713
Email: sales@kosnic.com
Kosnic.com
Kosnic Lighting KosnicUK KosnicLightingUK

5 Years
Product Warranty
UK Only

Telica Tilt

Kosnic
LIGHTING • SIMPLY BETTER

06327 TEL10TW-WHT

Optional Gear

Product Code	Description	Type
CYDIMRFT1	Easylink RF controlled AC triac wireless dimmer	Dimmable Driver
EMPAD01	Neka Emergency Downlight kit 2.5W Manual test	Emergency Module
EMPAD01/ST	Neka Emergency Downlight kit 3.5W Self-test	Self-test Emergency Module

Accessories

Product Code	Description	Type
KPT-10DTBZ-WHT	Telica Tilt, Interchangeable Bezel, White	Bezel
KPT-10DTBZ-SCH	Telica Tilt, Interchangeable Bezel, Satin Chrome	Bezel
KPT-10DTBZ-CHM	Telica Tilt, Interchangeable Bezel, Chrome	Bezel
KPT-10DTBZ-BLK	Telica Tilt, Interchangeable Bezel, Black	Bezel
KPT-10DTBZ-BAS	Telica Tilt, Interchangeable Bezel, Brass	Bezel

Overview

The Kosnic Telica Tilt tilting 10W dimmable fire rated downlights are suitable for 30, 60 and 90 minute applications. These compact downlights can be dimmed with mains dimmer switches and have a switchable CCT. There is a choice of interchangeable magnetic bezels with different finishes and a recessed anti-glare rim.

III IP44

CCT (K)	Lumen (lm)
2700	710
4000	790
6000	770

General Information

Ambient Temperature Range (°C)	-20°C to 50°C
IK Rating	IK07
IP Rating	IP44
Protection Rating	Class III
Installation Area	Internal

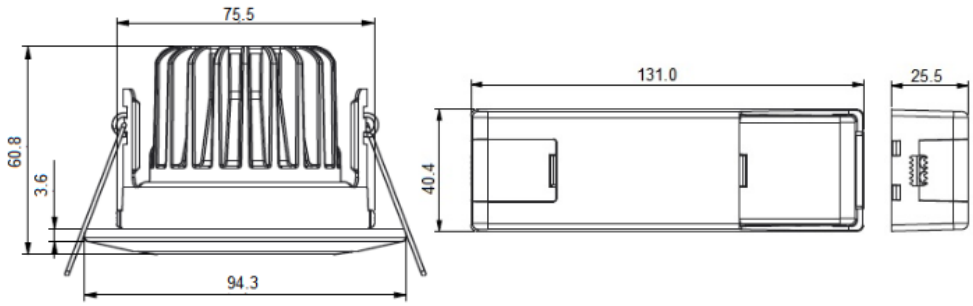

Mains Dimming Compatibility

The operation of common mains voltage AC dimmers appears similar but the electrical characteristics vary significantly. While this makes no difference to filament lamps, the effect on the electronics within the LED drivercan be dramatic and incompatible. The recommendations given are based on laboratory testing and should be used as guidance. The complicated application environment and huge variation in dimmer construction mean it is not possible to guarantee that a dimmer will work perfectly. In extreme cases incompatible dimmer switches may damage the LED drivers. Please ensure that the set-up is tested for performance before committing to a large project.

Recommended Dimmer Switches for Mains Dimming:

Manufacturer	Model	Marked Rating	Notes
Aurora	AU-DSP400X	400W	Leading
BG	DM400AP	5-50W LED	Leading
Click	CMA145 (or MD9022)	250W	Leading
CYANIRiS	CYDIMRFT1 (Remote)	2 x 288W	Programmable
Hamilton	H-GDM400W	400W	Trailing
Hamilton	H-LEDStat	100w	Programmable
Hamilton	L400/2 (or N4002)	400W	Leading
Varilight	Eclique (JDQI401S)	400W	Trailing
Varilight	V-Dim	400W	Leading
Varilight	V-Pro	100W LED	Programmable
Zano	ZQRID500	50W LED	Leading

Tel: 01635 523 713

Email: sales@kosnic.com

Kosnic.com

Kosnic Lighting KosnicUK KosnicLightingUK KosnicUK