7 Years
Product Warranty
UK Only

2 Years
On-Site Warranty
Main-land UK Only

Alto

Kosnic
LIGHTING • SIMPLY BETTER

06202 ALT30-SCT

Alto LED wall pack 30W IP65 CCT switchable

- Switchable CCT (3000/4000/6500K)
- Dusk-to-dawn / microwave sensor option
- Optional plug-in emergency modules, available in manual, self-test and DALI
- Die-cast aluminium body & polycarbonate diffuser
- IP65
- BESA box fitting points



Overview

The Alto LED Wall Bulkhead is a low maintenance, robust external lighting for commercial buildings. Suitable for perimeter lighting, pedestrian lighting and vehicle access area lighting. This range has sensor options: dusk to dawn sensor or a microwave presence sensor. With a metal base and polycarbonate opal diffuser.

IP65

General Information

Ambient Temperature Range (°C)	-20°C to 50°C
IK Rating	IK10
IP Rating	IP65
Protection Rating	Class I
Installation Area	Internal and External

Compliance

LVD	EN 60598-1:2024, EN 60598-2-1:2021, EN 62031:2020, EN 62493:2015+A1:2022
EMC	EN 55015:2019+A11:2020, EN 61000-3-2:2019+A1:2021, EN 61000-3-3:2013+A1:2019+A2:2021, EN 61547:2023
Others	UKCA, CE, RoHS, WEEE

Technical Summary	
Product Code	ALT30-SCT
Input Voltage Supply	220-240Vac 50/60Hz
Inrush Current (peak/duration) (A)	14A/360µs
Default Power	30 W
Driver Code/Part number	Boke
Power Factor	>0.94
Settable Colour Temperatures	3000K, 4000K, 6500K
CRI	≥82
Dimmable	N
Lumens Output Maximum	2,900 lm
Maximum Efficiency	97 lm/W
L70B50 Lifetime (h) @Ta 25 °C	50,000 h
L80B20 Lifetime (h) @Ta 25 °C	50,000 h
Nominal Lifetime (h)	50,000 h
Glow wire temperature(°C)	650
Blue Light Hazard	RG1
Weight	1.8Kg
Dimensions (L x W x D) (mm)	309x264x115
LS Energy Efficiency Class	E

Tel: 01635 523 713
Email: sales@kosnic.com
Kosnic.com
Kosnic Lighting KosnicUK KosnicLightingUK

7 Years
Product Warranty
UK Only

2 Years
On-Site Warranty
Main-land UK Only

Alto

Kosnic
LIGHTING • SIMPLY BETTER

06202 ALT30-SCT

Optional Gear

Product Code	Description	Type
EMDD02	2W standard emergency module for LED DD and bulkhead	Emergency Module
EMDD02/ST	2W self-test emergency module for LED DD and bulkhead	Self-test Emergency Module

Settable (Default in Bold)	**Variable**	
Rated Power (W)	**CCT (K)**	**Total Luminous Flux (lm)**
30	3000	2700
30	**4000**	**2900**
30	6500	2700

Overview

The Alto LED Wall Bulkhead is a low maintenance, robust external lighting for commercial buildings. Suitable for perimeter lighting, pedestrian lighting and vehicle access area lighting. This range has sensor options: dusk to dawn sensor or a microwave presence sensor. With a metal base and polycarbonate opal diffuser.

IP65

General Information

Ambient Temperature Range (°C)	-20°C to 50°C
IK Rating	IK10
IP Rating	IP65
Nominal Lifetime (h)	50,000 h
Protection Rating	Class I
Installation Area	Internal and External

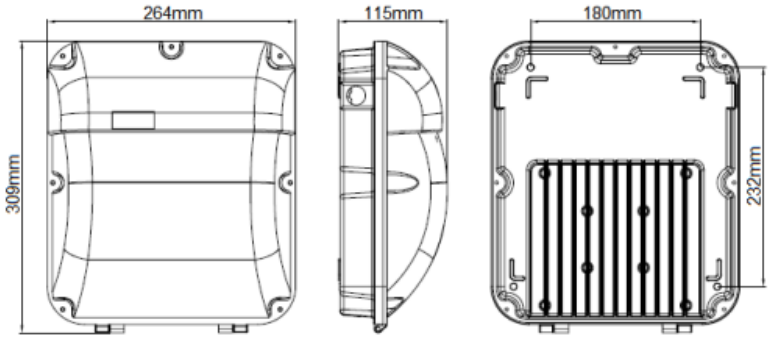

Tel: 01635 523 713
Email: sales@kosnic.com
Kosnic.com
Kosnic Lighting KosnicUK KosnicLightingUK KosnicUK