7 Years
Product Warranty
UK Only

2 Years
On-Site Warranty
Main-land UK Only

Tatio

Kosnic
LIGHTING • SIMPLY BETTER

05760 KWWDL09-B50

Tatio Wall Washer Downlight 9w 15° 5000K

- High performance CREE COB LED
- Optional add-on emergency kits, available in manual and self-test
- Negligible UV, ideal for retail application





Overview

The Tatio LED Wall Washer Downlight rotates through 350 degrees and has a 35 degree tilt. Available in varies CCT and has a high CRI, suitable for retail display, showrooms, entertainment and hospitality. Made from cast aluminium with a high-quality reflector the Kosnic Tatio delivers a highly efficient, high quality lighting

IP20

General Information

Ambient Temperature Range (°C)	-20°C to 50°C
IP Rating	IP20
Protection Rating	Class II
Installation Area	Internal

Compliance

LVD	EN 60598-1:2024, EN 60598-2-1:2021, EN 62493:2015+A1:2022
EMC	EN 55015:2019+A11:2020, EN 61000-3-2:2019+A1:2021, EN 61000-3-3:2013+A1:2019+A2:2021, EN 61547:2023
Others	UKCA, CE, RoHS, WEEE

Technical Summary	
Product Code	KWWDL09-B50
Input Voltage Supply	220-240Vac 50/60Hz
Default Power	9 W
Driver Code/Part number	Tridonic LC 10W 250/350mA fixC SR SNC2
Driver Maximum Power (W)	10 W
Driver Output Current (mA)	250
Power Factor	0.57
Driver Power Factor	0.5
Default CCT	5,000 K
SDCM of CCT	<6
CRI	83
Dimmable	N
Flicker	5%
Lumens Output Maximum	1,020 lm
Maximum Efficiency	113 lm/W
Emergency Luminous Flux	350 lm
Nominal Lifetime (h)	50,000 h
Weight	0.6Kg
Dimensions (L x W x D) (mm)	58x∅96
Cut-Out (mm)	∅82mm
Beam Angle - Lumi (°)	15

Tel: 01635 523 713
Email: sales@kosnic.com
Kosnic.com
Kosnic Lighting KosnicUK KosnicLightingUK

7 Years
Product Warranty
UK Only

2 Years
On-Site Warranty
Main-land UK Only

Tatio

Kosnic
LIGHTING • SIMPLY BETTER

05760 KWWDL09-B50

Optional Gear

Product Code	Description	Type
EMPAD01	Neka Emergency Downlight kit 2.5W Manual test	Emergency Module

Overview

The Tatio LED Wall Washer Downlight rotates through 350 degrees and has a 35 degree tilt. Available in varies CCT and has a high CRI, suitable for retail display, showrooms, entertainment and hospitality. Made from cast aluminium with a high-quality reflector the Kosnic Tatio delivers a highly efficient, high quality lighting

IP20

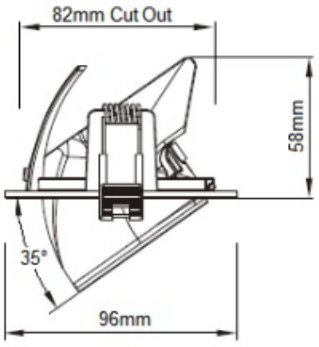

General Information

Ambient Temperature Range (°C)	-20°C to 50°C
IP Rating	IP20
Nominal Lifetime (h)	50,000 h
Protection Rating	Class II
Installation Area	Internal

Tel: 01635 523 713
Email: sales@kosnic.com
Kosnic.com
Kosnic Lighting KosnicUK KosnicLightingUK KosnicUK