5 Years
Product Warranty
UK Only

Ventas 2

Kosnic
LIGHTING • SIMPLY BETTER

05722 VEN10-SCT

Ventas 2 IP65 floodlight 10W CCT switch w/remote

- CCT switching with remote control included
- Surge protection
- Diecast aluminium body
- Slim profile
- 1m of H05RN-F 3 x 1mm2 cable



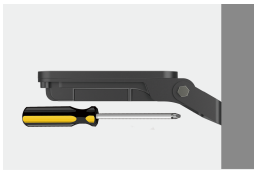



Overview

Kosnic Ventas LED floodlights with PIR sensor option. Available in 10W, 20W, 30W and 50W with switchable CCT by remote control (included). The high-quality aluminium floodlights make ideal replacements for energy-hungry halogen lighting and are suitable for outdoor use offering high lumen efficiency and a long life

IP65

General Information

Ambient Temperature Range (°C)	-20°C to 40°C
IK Rating	IK06
IP Rating	IP65
Protection Rating	Class I
Installation Area	External
L80B10 Lifetime (h) @Ta 25 °C	36,000 h

Compliance

LVD	EN 60598-1:2024, EN 60598-2-5:2015, EN 62031:2020, EN 62493:2015+A1:2022
EMC	EN 55015:2019+A11:2020, EN 61000-3-2:2019+A1:2021, EN 61000-3-3:2013+A1:2019+A2:2021, EN 61547:2023
Others	UKCA, CE, RoHS, WEEE

Technical Summary	
Product Code	VEN10-SCT
Input Voltage Supply	220-240Vac 50/60Hz
Inrush Current (peak/duration) (A)	0.06A/60µs
Default Power	10 W
Power Factor	0.99
Settable Colour Temperatures	3000K, 4000K, 6500K
SDCM of CCT	<6
CRI	≥82
Dimmable	Specific Dimmer
Lumens Output Maximum	660 lm
Maximum Efficiency	66 lm/W
L70B50 Lifetime (h) @Ta 25 °C	36,000 h
L80B10 Lifetime (h) @Ta 25 °C	36,000 h
L90B10 Lifetime (h) @Ta 25 °C	25,000 h
Nominal Lifetime (h)	30,000 h
Glow wire temperature(°C)	650
Blue Light Hazard	RG1
Weight	0.32Kg
Dimensions (L x W x D) (mm)	101x134x30
Beam Angle - Lumi (°)	105
LS Energy Efficiency Class	F

Tel: 01635 523 713
Email: sales@kosnic.com
Kosnic.com
Kosnic Lighting KosnicUK KosnicLightingUK

5 Years
Product Warranty
UK Only

Ventas 2

Kosnic
LIGHTING • SIMPLY BETTER

05722 VEN10-SCT

Overview

Kosnic Ventas LED floodlights with PIR sensor option. Available in 10W, 20W, 30W and 50W with switchable CCT by remote control (included). The high-quality aluminium floodlights make ideal replacements for energy-hungry halogen lighting and are suitable for outdoor use offering high lumen efficiency and a long life

IP65

General Information

Ambient Temperature Range (°C)	-20°C to 40°C
IK Rating	IK06
IP Rating	IP65
Nominal Lifetime (h)	30,000 h
Protection Rating	Class I
Installation Area	External

Accessories

Product Code	Description	Type
KCWP3IN	IP67 in-line connector	Connector kit

Settable (Default in Bold)	**Variable**	
Rated Power (W)	**CCT (K)**	**Total Luminous Flux (lm)**
10	3000	590
10	**4000**	**660**
10	6500	590

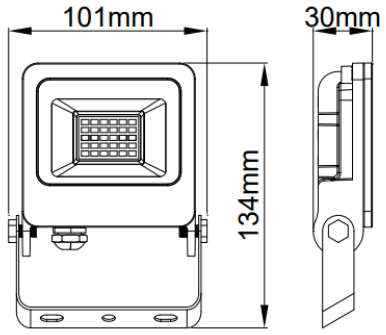

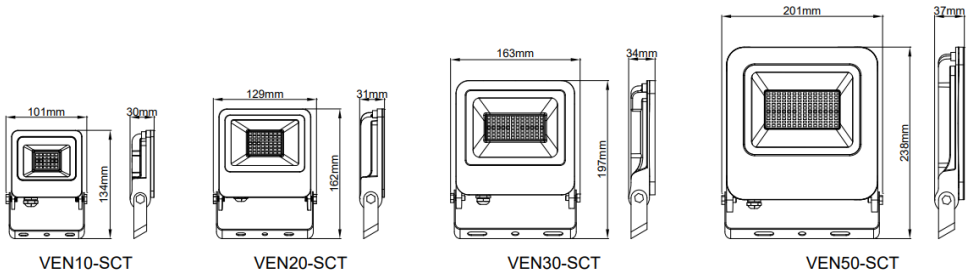

VEN10-SCT VEN20-SCT VEN30-SCT VEN50-SCT

Tel: 01635 523 713
Email: sales@kosnic.com
Kosnic.com
Kosnic Lighting KosnicUK KosnicLightingUK KosnicUK