7 Years
Product Warranty
UK Only

2 Years
On-Site Warranty
Main-land UK Only

Aloba

Kosnic
LIGHTING • SIMPLY BETTER

03585 ALB34-S30

Aloba, Global Track Downlight, 34W, 40°, 3000K

- Popular global/unipro track
- Options of narrow and wide beam angles
- Negligible UV, ideal for retail application



Overview

The Kosnic LED Tracklight is suitable for use with the Global 3 Circuit Track System. With a 350 degree rotation and 180 degree tilt, the Kosnic LED Tracklight is able to deliver a lot of light right where you need it. The LED Tracklight is particularly suitable for retail display, showrooms, galleries, and museums.

IP20

General Information

Ambient Temperature Range (°C)	-20°C to 50°C
IP Rating	IP20
Protection Rating	Class I
Installation Area	Internal

Compliance

Others	UKCA, CE, RoHS, WEEE

Technical Summary	
Product Code	ALB34-S30
Input Voltage Supply	220-240Vac 50/60Hz
Default Power	34 W
Power Factor	0.95
Default CCT	3,000 K
SDCM of CCT	<6
CRI	≥82
Dimmable	N
Lumens Output Maximum	3,200 lm
Maximum Efficiency	94 lm/W
Nominal Lifetime (h)	50,000 h
Weight	1.08Kg
Dimensions (L x W x D) (mm)	260x152.5x97
Beam Angle - Lumi (°)	40

Tel: 01635 523 713
Email: sales@kosnic.com
Kosnic.com
Kosnic Lighting KosnicUK KosnicLightingUK

7 Years
Product Warranty
UK Only

2 Years
On-Site Warranty
Main-land UK Only

Aloba

Kosnic
LIGHTING • SIMPLY BETTER

03585 ALB34-S30

Overview

The Kosnic LED Tracklight is suitable for use with the Global 3 Circuit Track System. With a 350 degree rotation and 180 degree tilt, the Kosnic LED Tracklight is able to deliver a lot of light right where you need it. The LED Tracklight is particularly suitable for retail display, showrooms, galleries, and museums.

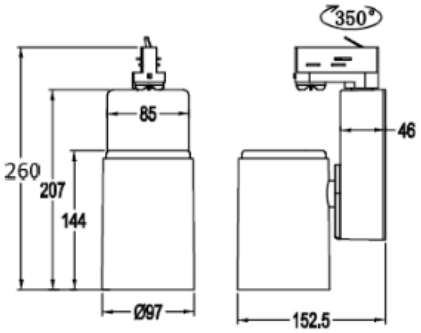

IP20

General Information

Ambient Temperature Range (°C)	-20°C to 50°C
IP Rating	IP20
Nominal Lifetime (h)	50,000 h
Protection Rating	Class I
Installation Area	Internal

Tel: 01635 523 713

Email: sales@kosnic.com

Kosnic.com

Kosnic Lighting KosnicUK KosnicLightingUK KosnicUK