7 Years
Product Warranty
UK Only

2 Years
On-Site Warranty
Main-land UK Only

Tatio

Kosnic
LIGHTING • SIMPLY BETTER

03576 KWWDL24-B50

Tatio Wall Washer Downlight 24w 15° 5000K

- High performance CREE COB LED
- Optional add-on emergency kits, available in manual and self-test
- Negligible UV, ideal for retail application





Overview

The Tatio LED Wall Washer Downlight rotates through 350 degrees and has a 35 degree tilt. Available in varies CCT and has a high CRI, suitable for retail display, showrooms, entertainment and hospitality. Made from cast aluminium with a high-quality reflector the Kosnic Tatio delivers a highly efficient, high quality lighting

IP20

General Information

Ambient Temperature Range (°C)	-20°C to 50°C
IP Rating	IP20
Protection Rating	Class II
Installation Area	Internal

Compliance

Others	UKCA, CE, RoHS, WEEE

Technical Summary	
Product Code	KWWDL24-B50
Input Voltage Supply	220-240Vac 50/60Hz
Default Power	24 W
Driver Code/Part number	CYC026SNL058N
Driver Maximum Power (W)	26 W
Driver Output Current (mA)	580
Power Factor	0.95
Driver Power Factor	0.96
Default CCT	5,000 K
SDCM of CCT	<6
CRI	82
Dimmable	N
Lumens Output Maximum	2,000 lm
Maximum Efficiency	100 lm/W
Emergency Luminous Flux	220 lm
Nominal Lifetime (h)	50,000 h
Weight	0.98Kg
Dimensions (L x W x D) (mm)	130x∅158
Cut-Out (mm)	∅145mm
Beam Angle - Lumi (°)	15

Tel: 01635 523 713
Email: sales@kosnic.com
Kosnic.com
Kosnic Lighting KosnicUK KosnicLightingUK

7 Years
Product Warranty
UK Only

2 Years
On-Site Warranty
Main-land UK Only

Tatio

Kosnic
LIGHTING • SIMPLY BETTER

03576 KWWDL24-B50

Optional Gear

Product Code	Description	Type
EMPAD01	Neka Emergency Downlight kit 2.5W Manual test	Emergency Module

Overview

The Tatio LED Wall Washer Downlight rotates through 350 degrees and has a 35 degree tilt. Available in varies CCT and has a high CRI, suitable for retail display, showrooms, entertainment and hospitality. Made from cast aluminium with a high-quality reflector the Kosnic Tatio delivers a highly efficient, high quality lighting

IP20

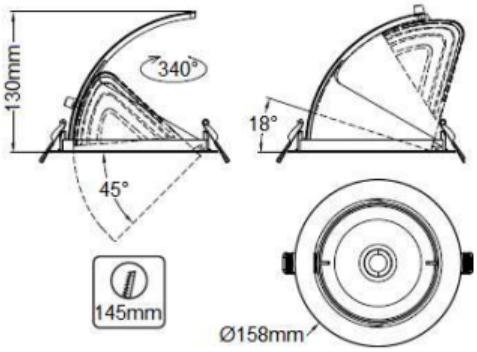

General Information

Ambient Temperature Range (°C)	-20°C to 50°C
IP Rating	IP20
Nominal Lifetime (h)	50,000 h
Protection Rating	Class II
Installation Area	Internal

Tel: 01635 523 713

Email: sales@kosnic.com

Kosnic.com

Kosnic Lighting KosnicUK KosnicLightingUK KosnicUK