V-SHOWER flex wall

Cuttable shower channel for floor-level, barrier-free shower areas for direct floor-wall connection



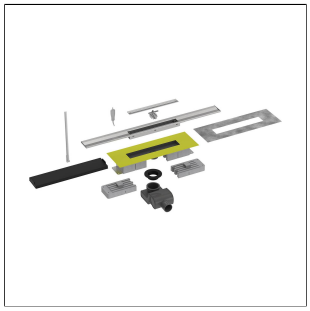
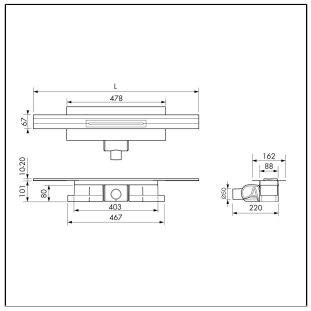

TECHNICAL DIMENSIONS AND PRODUCT VARIANTS

Material	[Stainless Steel (304)]
Surface	[brushed], [powder coated]
Colour	natural, white matt (RAL 9003), black matt (RAL 9005)
Length	80 cm, 100 cm, 120 cm
sight width	67 mm
Width mm	40 mm
installation height mm	71, 101
sealing water height mm	30, 50
dimension	40

PRODUCT VARIANTS

Ident	Surface	Colour	Length
VSFW 70-SF/80	brushed	natural	80 cm
VSFW 100-SF/80	brushed	natural	80 cm
VSFW 70-SF/100	brushed	natural	100 cm
VSFW 100-SF/100	brushed	natural	100 cm
VSFW 70-SF/120	brushed	natural	120 cm
VSFW 100-SF/120	brushed	natural	120 cm
VSFWC 711/80	powder coated	black matt (RAL 9005)	80 cm
VSFWC 1011/80	powder coated	black matt (RAL 9005)	80 cm
VSFWC 711/100	powder coated	black matt (RAL 9005)	100 cm
VSFWC 1011/100	powder coated	black matt (RAL 9005)	100 cm
VSFWC 711/120	powder coated	black matt (RAL 9005)	120 cm
VSFWC 1011/120	powder coated	black matt (RAL 9005)	120 cm
VSFWC 712/80	powder coated	white matt (RAL 9003)	80 cm
VSFWC 1012/80	powder coated	white matt (RAL 9003)	80 cm
VSFWC 712/100	powder coated	white matt (RAL 9003)	100 cm

Please note: For technical reasons, tolerances in color effects of the materials and print are possible.
All information is based on the best of our knowledge and belief. No guarantee can be derived from this.
We reserve the right to any technical changes if they are in the interest of progress or if they are production-related.

DURAL Ltd. | Unit 6a | Wakefield Business Centre Denby Dale Rd | Wakefield | WF2 7AZ | United Kingdom | ukinfo@dural.com

VSFWC 1012/100	powder coated	white matt (RAL 9003)	100 cm
VSFWC 712/120	powder coated	white matt (RAL 9003)	120 cm
VSFWC 1012/120	powder coated	white matt (RAL 9003)	120 cm

Data sheet Accessories

Drain DN 40:
- Drainage capacity 36 l/min
- Water seal height 30 mm
- Minimum installation height: 71 mm

Drain DN 50
- Drainage capacity 41.4 l/min
- Water seal height 50 mm
- Minimum installation height: 101 mm

Drain can be rotated 90° and shortened
Infinitely height-adjustable: 10 mm (for covering thicknesses of approx. 10 to 20 mm)

Designer covers can be shortened to 40 cm, asymmetrical cutting also possible

Lifter for cover, cleaning plug and end caps included in set.
Fleece sleeve for sealing with waterproof membrane
A vertical drain (VSFAV) and fire protection sleeve (BSM) are available as optional extras.

PROPERTIES

Drain DN 40:
- Drainage capacity 36 l/min
- Water seal height 30 mm
- Minimum installation height: 71 mm

Drain DN 50
- Drainage capacity 41.4 l/min
- Water seal height 50 mm
- Minimum installation height: 101 mm

Drain can be rotated 90° and shortened
Infinitely height-adjustable: 10 mm (for covering thicknesses of approx. 10 to 20 mm)

Designer covers can be shortened to 40 cm, asymmetrical cutting also possible

MATERIAL

ABS plastic (acrylonitrile butadiene styrene)
polypropylene

Stainless steel V2A/304 is particularly suitable for applications subject to high mechanical stress and for applications with particularly high requirements for cleanliness, hygiene and chemical resistance. Contact with products containing hydrochloric acid should be avoided.

No tools made of unalloyed steel may be used during processing. Open cut edges are not rust-resistant. If necessary, separate rust protection must be applied.

Even with stainless steel, flash rust may occur depending on the environmental conditions and should be removed immediately.

Please note: For technical reasons, tolerances in color effects of the materials and print are possible.
All information is based on the best of our knowledge and belief. No guarantee can be derived from this.
We reserve the right to any technical changes if they are in the interest of progress or if they are production-related.

The suitability for use in terms of mechanical and chemical resistance must always be checked on a case-by-case basis.

PROCESSING

1. Determine the height of the finished tile covering.
2. To do this, include the finished wall surfaces and the planned screed, including a gradient of 2%, for positioning.
3. Next, include the height of the substrate including insulation, screed thickness, wall-to-floor connection with joint and the planned tile thickness including mortar bed to calculate the height.
4. Connect the channel body to the drain. If necessary, cut the feet under the channel body at an angle to achieve the desired angle for the drain.
5. Place the base body and adjust it to the required height using tile adhesive. Caution: The channel body must be aligned both lengthwise and crosswise. We recommend using the black
building protection cover to prevent contamination in the drain pipe.
6. Underlay the drain and connect it to the drainage system. Check the system for leaks.
7. Finish the screed. The base body must be fully supported with screed up to the top edge of the flange and compacted. Cavities must be avoided at all costs.
8. Once the screed has dried, apply the yellow pipe collar to the screed by gluing it in place. Complete the floor sealing. If using a waterproof membrane, first apply the fleece sealing collar included in the scope of delivery to the yellow self-adhesive sealing mat by gluing it in place.
9. Place the cover. For primary water drainage, seal the entire frame of the channel with sealing adhesive.
10. After tiling, the transition between the tiled floor and the shower channel must be permanently sealed with an elastic joint (primary water drainage). The adhesive surfaces must be free of mortar, adhesive and other materials that reduce adhesion.

The generally accepted rules of technology and tiling must be observed. Suitability for use with mechanical and chemical resistance must always be checked in each individual case.

CARE

Stainless steel V2A/304 does not require any special care. If necessary, it can be cleaned simply with clear, clean water and a few drops of washing-up liquid. Then wipe dry.

Avoid using acidic, alkaline and abrasive cleaning agents. Flash rust can be removed with commercially available polishes suitable for stainless steel.

Please note: For technical reasons, tolerances in color effects of the materials and print are possible.
All information is based on the best of our knowledge and belief. No guarantee can be derived from this.
We reserve the right to any technical changes if they are in the interest of progress or if they are production-related.