EN Datasheet

SQUARELINE-LED

Led Illuminated Edge Profile In Aluminium



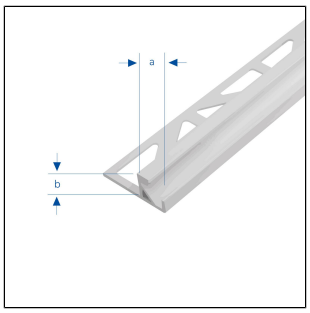

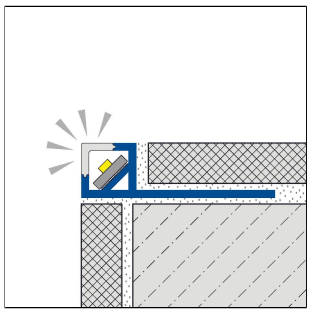

ACCESSORIES

Translucent covers in various colours, LED strips, switches and connection material are available as accessories.

We recommend using only original accessories from DURAL.

PROPERTIES

Suitable for all LED strips up to 8 mm width

MATERIAL

Aluminium/Polycarbonate can be used wherever medium mechanical loads are expected. Contact with alkaline materials (e.g. tile adhesive) can cause discolouration that is difficult to remove. High humidity during the drying phase can intensify this process. Always wipe tile adhesive or grout off visible surfaces immediately with plenty of water, then wipe dry and ensure good room ventilation.

The suitability with regard to mechanical and chemical resistance must always be checked in each individual case.

CARE

Aluminium/polycarbonate does not require any special care. If necessary, it can be cleaned with clear, clean water and a few drops of washing-up liquid. Then wipe dry.

Avoid using acidic, alkaline and abrasive cleaning agents.

PROCESSING

1. Select the profile according to the tile thickness.
2. Apply tile adhesive with a notched trowel.
3. Press the profile into the adhesive bed and align it.
4. Fill the fixing flange completely with adhesive.
5. Press the tiles firmly into place and align them so that they are flush with the top edge of the profile. Lay the tiles so that they are completely covered.
6. Leave a 1-2 mm gap between the profile and the tiles.
7. Fill the space between the tiles and the profile completely with joint mortar.
8. Cut the LED strip to length at the designated points and carry out a function test.
9. Glue the LED strip centrally onto the diagonal bar in the profile and connect it.

Please note: For technical reasons, tolerances in color effects of the materials and print are possible.
All information is based on the best of our knowledge and belief. No guarantee can be derived from this.
We reserve the right to any technical changes if they are in the interest of progress or if they are production-related.

DURAL GmbH | Südring 11 | D-56412 Ruppach-Goldhausen | Germany | +49 2602/9261-0 | info@dural.com
DURAL Ltd. | Unit 6a | Wakefield Business Centre Denby Dale Rd | Wakefield | WF2 7AZ | United Kingdom | ukinfo@dural.com

10. Attach the translucent cover.

Protect visible surfaces from contact with tile adhesive or grout and clean immediately with a cloth and clear water if necessary. Then rub dry.

The generally accepted rules of technology and tiling must be observed. Suitability for use with mechanical and chemical resistance must always be checked in each individual case.

TECHNICAL DIMENSIONS AND PRODUCT VARIANTS

Material	[Aluminium]
Surface	[powder coated], [anodised]
Colour	white, silver, champagne, black, titanium, black matt (RAL 9005)
Length	250 cm
sight width	10 mm, 12 mm
Height	9 mm, 11 mm
Width mm	10 mm, 12 mm

PRODUCT VARIANTS

Ident	Height	Surface	Colour	Length
SQLAE LED 90-SW/250	9 mm	anodised	black	250 cm
SQLAE LED 90-C/250	9 mm	anodised	champagne	
SQLAE LED 90/250	9 mm	anodised	silver	250 cm
SQLAE LED 90-T/250	9 mm	anodised	titanium	250 cm
SQLACM LED 911/250	9 mm	powder coated	black matt (RAL 9005)	250 cm
SQLAC LED 930/250	9 mm	powder coated	white	250 cm
SQLAE LED 110-SW/250	11 mm	anodised	black	250 cm
SQLAE LED 110-C/250	11 mm	anodised	champagne	
SQLAE LED 110/250	11 mm	anodised	silver	250 cm
SQLAE LED 110-T/250	11 mm	anodised	titanium	250 cm
SQLACM LED 1111/250	11 mm	powder coated	black matt (RAL 9005)	250 cm
SQLAC LED 1130/250	11 mm	powder coated	white	250 cm

Please note: For technical reasons, tolerances in color effects of the materials and print are possible.
All information is based on the best of our knowledge and belief. No guarantee can be derived from this.
We reserve the right to any technical changes if they are in the interest of progress or if they are production-related.