EN Datasheet

FLORENTOSTEP

Florentine-Style Metal Stair Nosing Profile

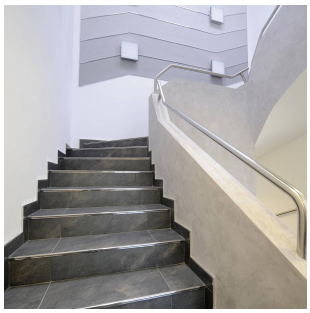
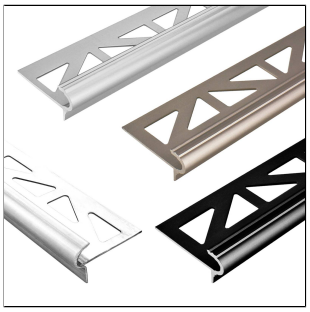
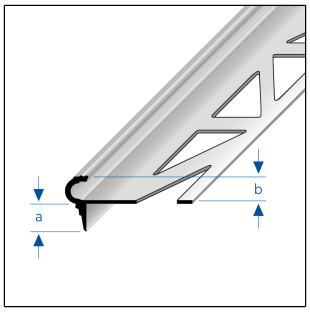

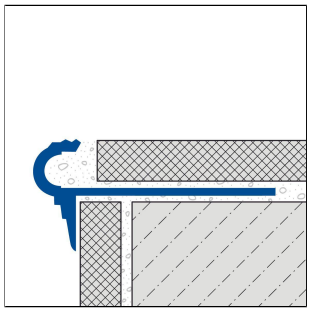

ACCESSORIES

Matching corner pieces and end caps are available as accessories.

MATERIAL

Aluminium can be used wherever medium mechanical stress is to be expected. Contact with alkaline materials (e.g. tile adhesive) can cause discolouration that is difficult to remove. High humidity during the drying phase can intensify this process. Always wipe tile adhesive or grout from visible surfaces immediately with plenty of water, then wipe dry and ensure good room ventilation.

The suitability with regard to mechanical and chemical resistance must always be checked on a case-by-case basis.

CARE

Aluminium does not require any special care. If necessary, it can be cleaned with clear, clean water and a few drops of washing-up liquid. Then wipe dry.

Avoid using acidic and abrasive cleaning agents.

PROCESSING

1. Select the profile according to the tile thickness.
2. Apply tile adhesive with a notched trowel.
3. Press the profile into the adhesive bed and align it.
4. Fill the fixing flange completely with adhesive.
5. Press the tiles firmly into place and align them so that they are flush with the top edge of the profile. Lay the tiles so that they are completely covered.
6. Use matching inner or outer corner pieces. Close open sides with the matching end caps.
7. Leave a 1-2 mm joint between the profile and the tiles.
8. Fill the space between the tiles and the profile completely with joint mortar.
9. Close open sides with the appropriate end caps.

Protect visible surfaces from contact with tile adhesive or grout and clean immediately with a cloth and clear water if necessary. Then rub dry.

Please note: For technical reasons, tolerances in color effects of the materials and print are possible.
All information is based on the best of our knowledge and belief. No guarantee can be derived from this.
We reserve the right to any technical changes if they are in the interest of progress or if they are production-related.

DURAL GmbH | Südring 11 | D-56412 Ruppach-Goldhausen | Germany | +49 2602/9261-0 | info@dural.com
DURAL Ltd. | Unit 6a | Wakefield Business Centre Denby Dale Rd | Wakefield | WF2 7AZ | United Kingdom | ukinfo@dural.com

The generally accepted rules of technology and tiling must be observed. Suitability for use with mechanical and chemical resistance must always be checked in each individual case.

TECHNICAL DIMENSIONS AND PRODUCT VARIANTS

Material	[Aluminium], [Metal die-cast], [Stainless Steel (304)]
Surface	[powder coated], [natural], [anodised]
Colour	natural, silver, titanium, black matt (RAL 9005)
Length	150 cm, 250 cm, 300 cm
Height	13.5 mm, 9 mm, 11 mm
Width mm	32 mm, 34 mm, 36 mm
height 2	7.5 mm, 8 mm

PRODUCT VARIANTS

Ident	Height	Surface	Colour	Length
FSTAE 90/250	9 mm	anodised	silver	250 cm
FSTAE 90/300	9 mm	anodised	silver	300 cm
FSTAE 90-T/250	9 mm	anodised	titanium	250 cm
FSTA 90/250	9 mm	natural	natural	250 cm
FSTE 90/250	9 mm	natural	natural	250 cm
FSTA 90/300	9 mm	natural	natural	300 cm
FSTACM 911/250	9 mm	powder coated	black matt (RAL 9005)	250 cm
FSTAC 953/150	9 mm	powder coated	titanium	150 cm
FSTAC 953/250	9 mm	powder coated	titanium	250 cm
FSTAE 110/150	11 mm	anodised	silver	150 cm
FSTAE 110/250	11 mm	anodised	silver	250 cm
FSTAE 110/300	11 mm	anodised	silver	300 cm
FSTAE 110-T/250	11 mm	anodised	titanium	250 cm
FSTAE 110-T/300	11 mm	anodised	titanium	300 cm
FSTE 110/150	11 mm	natural	natural	150 cm
FSTE 110/250	11 mm	natural	natural	250 cm

Please note: For technical reasons, tolerances in color effects of the materials and print are possible.
All information is based on the best of our knowledge and belief. No guarantee can be derived from this.
We reserve the right to any technical changes if they are in the interest of progress or if they are production-related.

DURAL GmbH | Südring 11 | D-56412 Ruppach-Goldhausen | Germany | +49 2602/9261-0 | info@dural.com
DURAL Ltd. | Unit 6a | Wakefield Business Centre Denby Dale Rd | Wakefield | WF2 7AZ | United Kingdom | ukinfo@dural.com

FSTACM 1111/250	11 mm	powder coated	black matt (RAL 9005)	250 cm
FSTAC 1153/150	11 mm	powder coated	titanium	150 cm
FSTAC 1153/250	11 mm	powder coated	titanium	250 cm
FSTAE 135/250	13.5 mm	anodised	silver	250 cm
FSTACM 1311/250	13.5 mm	powder coated	black matt (RAL 9005)	250 cm

Please note: For technical reasons, tolerances in color effects of the materials and print are possible.
All information is based on the best of our knowledge and belief. No guarantee can be derived from this.
We reserve the right to any technical changes if they are in the interest of progress or if they are production-related.

DURAL GmbH | Südring 11 | D-56412 Ruppach-Goldhausen | Germany | +49 2602/9261-0 | info@dural.com
DURAL Ltd. | Unit 6a | Wakefield Business Centre Denby Dale Rd | Wakefield | WF2 7AZ | United Kingdom | ukinfo@dural.com