DURAFLEX PVC-L

Expansion and movement joint profile for thin-bed installation with extra-wide base


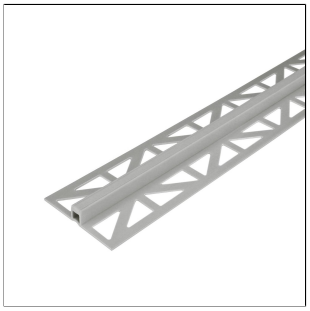
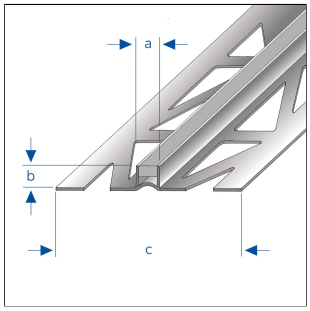

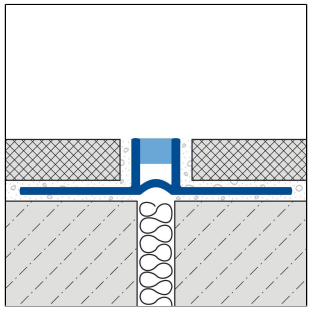

TECHNICAL DIMENSIONS AND PRODUCT VARIANTS

Material	[PVC]
Colour	beige, black, grey, dark grey, white
Length	250 cm
sight width	8 mm
Height	12.5 mm, 6 mm, 8 mm, 10 mm, 15 mm
Width mm	8 mm
Supplementary colour	Insert colour: beige, Insert colour: black, Insert colour: grey

PRODUCT VARIANTS

Ident	Height	Colour	Length
DFP 633-L/250	6 mm	black	250 cm
DFP 638-L/250	6 mm	grey	250 cm
DFP 833-L/250	8 mm	black	250 cm
DFP 838-L/250	8 mm	grey	250 cm
DFP 830-L/250	8 mm	white	250 cm
DFP 1032-L/250	10 mm	beige	250 cm
DFP 1033-L/250	10 mm	black	250 cm
DFP 1039-L/250	10 mm	dark grey	250 cm
DFP 1038-L/250	10 mm	grey	250 cm
DFP 1232-L/250	12.5 mm	beige	250 cm
DFP 1233-L/250	12.5 mm	black	250 cm
DFP 1238-L/250	12.5 mm	grey	250 cm
DFP 1532-L/250	15 mm	beige	250 cm
DFP 1533-L/250	15 mm	black	250 cm
DFP 1538-L/250	15 mm	grey	250 cm

Please note: For technical reasons, tolerances in color effects of the materials and print are possible.
All information is based on the best of our knowledge and belief. No guarantee can be derived from this.
We reserve the right to any technical changes if they are in the interest of progress or if they are production-related.

MATERIAL

PVC is particularly suitable for indoor and outdoor areas subject to low mechanical stress. The material is solution-dyed and therefore UV-resistant under normal conditions; however, colour variations may occur if exposed to constant UV radiation.

Suitability in terms of mechanical and chemical resistance must always be assessed on a case-by-case basis.

Note: When using coloured grout containing ultra-fine colour pigments in conjunction with plastic profiles, irreversible staining of the profiles may occur. We recommend taking appropriate protective measures.

PROCESSING

1. Select the profile to match the tile thickness.
2. Apply tile adhesive using a notched trowel.
3. Press the profile into the adhesive bed and align it. Any expansion joints in the substrate must be replicated exactly.
4. Cover the fixing tabs completely with adhesive.
5. Press the tiles firmly into place and align them so that they are flush with the top edge of the profile. Lay the tiles with full coverage.
6. Leave a 2 mm joint between the profile and the tiles.
7. Fill the space between the tiles and the profile completely with grout.

The tiles adjacent to the expansion and movement joint profile must be set in the tile adhesive with a 2 mm width of joint against the vertical flange of the profile. In doing so, the holes in the fixing flanges must be completely filled with tile adhesive, leaving no voids, and the vertical flanges must be filled diagonally with tile adhesive. The upper edge of the profile must be flush with the tile surface at most. The profile must not protrude beyond the surface of the covering, but should preferably be up to 1 mm lower. In the area of the profile, the tiles must be laid over the entire surface and fully embedded in the adhesive bed, and the joints must be completely filled across their entire cross-section.
Furthermore, an uncut tile edge must always be placed against the profile.
In general, when using our expansion profiles, care must be taken to ensure that the flooring used in combination with our profile also meets the relevant requirements regarding the loads incurred (per metre or per square metre) and is capable of withstanding them. We assume that the installation has been carried out correctly!
A slow-active angle grinder with a suitable cutting disc must be used to cut the profiles. Prevent cutting sparks from settling on the profile surfaces.
Protect visible surfaces from contact with tile adhesive or grout and, if necessary, clean immediately with a cloth and clean water. Then rub dry.

The generally accepted rules of technology and tiling must be observed. Suitability for use with mechanical and chemical resistance must always be checked in each individual case.

CARE

PVC does not require any special care. If necessary, it can simply be cleaned with clean, clear water and a few drops of washing-up liquid.

Avoid using cleaning products containing solvents or abrasive substances.

Please note: For technical reasons, tolerances in color effects of the materials and print are possible.
All information is based on the best of our knowledge and belief. No guarantee can be derived from this.
We reserve the right to any technical changes if they are in the interest of progress or if they are production-related.