EN Datasheet

DURAFLEX SB corner version

Cover Profile In Corner Design Made Of Aluminium With Exchangeable Inlay



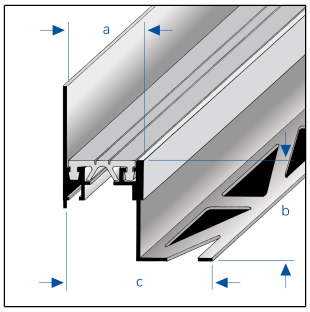

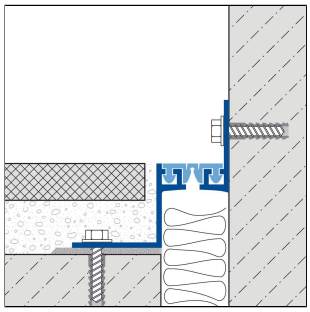

TECHNICAL DIMENSIONS AND PRODUCT VARIANTS

Material	[Aluminium]
Colour	black, grey
Length	250 cm
Height	15 mm, 35 mm, 40 mm, 50 mm
Width mm	33 mm
Supplementary colour	Visual edge, aluminium support profile, natural finish

PRODUCT VARIANTS

Ident	Height	Colour	Length

Please note: For technical reasons, tolerances in color effects of the materials and print are possible.
All information is based on the best of our knowledge and belief. No guarantee can be derived from this.
We reserve the right to any technical changes if they are in the interest of progress or if they are production-related.

DURAL GmbH | Südring 11 | D-56412 Ruppach-Goldhausen | Germany | +49 2602/9261-0 | info@dural.com
DURAL Ltd. | Unit 6a | Wakefield Business Centre Denby Dale Rd | Wakefield | WF2 7AZ | United Kingdom | ukinfo@dural.com

The recognised standards and regulations of technology must be observed. Previous data sheets are invalid.

DFA SB 1533-X/250	15 mm	black	250 cm
DFA SB 1538-X/250	15 mm	grey	250 cm
DFA SB 3533-X/250	35 mm	black	250 cm
DFA SB 3538-X/250	35 mm	grey	250 cm
DFA SB 4033-X/250	40 mm	black	250 cm
DFA SB 4038-X/250	40 mm	grey	250 cm
DFA SB 5033-X/250	50 mm	black	250 cm
DFA SB 5038-X/250	50 mm	grey	250 cm

Please note: For technical reasons, tolerances in color effects of the materials and print are possible.
All information is based on the best of our knowledge and belief. No guarantee can be derived from this.
We reserve the right to any technical changes if they are in the interest of progress or if they are production-related.

DURAL GmbH | Südring 11 | D-56412 Ruppach-Goldhausen | Germany | +49 2602/9261-0 | info@dural.com
DURAL Ltd. | Unit 6a | Wakefield Business Centre Denby Dale Rd | Wakefield | WF2 7AZ | United Kingdom | ukinfo@dural.com

The recognised standards and regulations of technology must be observed. Previous data sheets are invalid.