V-SHOWER flex / TI-DRAIN plus

Fire protection set consisting of: fire protection collar, PP HT socket DN 50 and an identification label. Fire protection collar for floor drain series with vertical outlet (standard plastic drain pipes in accordance with the approval). Compatible with all standard plastic drain pipes in accordance with the approval. Fire and flue gas resistant - fire resistance class R90 in accordance with DIN 4102-11. The fire resistance duration of up to 90 minutes has been successfully confirmed by fire tests.

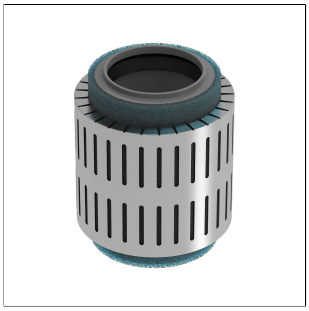

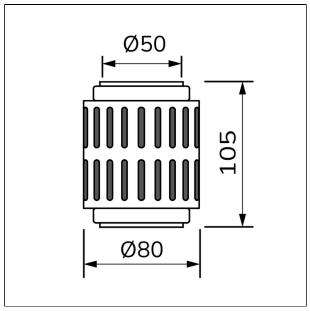

TECHNICAL DIMENSIONS AND PRODUCT VARIANTS

Material	[Polypropylene]

PRODUCT VARIANTS

Ident
BSM-VSF-TDP

Data sheet Accessories

Fire resistance rating of up to 90 minutes
Direct installation under the drain via plug connection
Highly fire-resistant DN 50 partition
Solid ceilings from 150 to 325 mm ceiling thickness
Fire and smoke resistant
Fire resistance class "R90" according to DIN 4102-11

PROPERTIES

Fire resistance rating of up to 90 minutes
Direct installation under the drain via plug connection

Please note: For technical reasons, tolerances in color effects of the materials and print are possible.
All information is based on the best of our knowledge and belief. No guarantee can be derived from this.
We reserve the right to any technical changes if they are in the interest of progress or if they are production-related.

Highly fire-resistant DN 50 partition
Solid ceilings from 150 to 325 mm ceiling thickness
Fire and smoke resistant
Fire resistance class "R90" according to DIN 4102-11

MATERIAL

Fire protection sleeve
PP HT sleeve DN 50

PROCESSING

1. Drill a hole with a diameter of 130 mm through the ceiling.
2. Push the ø 50 mm pipe through the hole in the ceiling until it comes out.
3. Insert the pipe and drain into the fire protection sleeve.
4. Connect the drain to the channel and place it in the desired position.
5. Fill the empty space around the fire protection sleeve with fire protection mortar.

The generally accepted rules of technology and tiling must be observed. Suitability for use with mechanical and chemical resistance must always be checked in each individual case.

Please note: For technical reasons, tolerances in color effects of the materials and print are possible.
All information is based on the best of our knowledge and belief. No guarantee can be derived from this.
We reserve the right to any technical changes if they are in the interest of progress or if they are production-related.