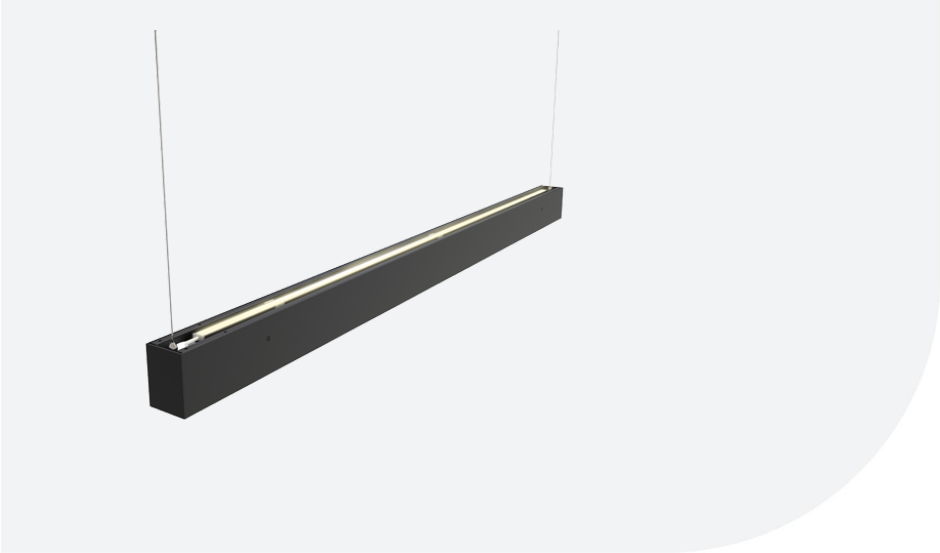

Vasco

Category	Commercial Linear
Application	Commercial, Education
Specification	Architectural

Code: AVASLED5/B/SM3

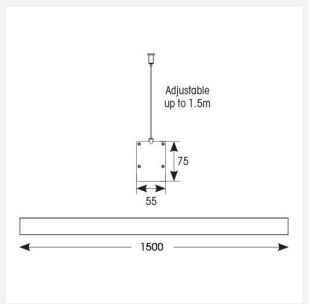

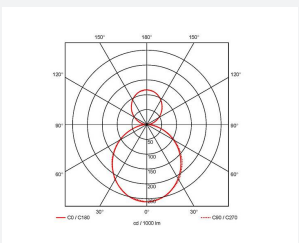

- Aluminium bi-directional suspended or surface linear suitable for education, commercial and retail applications
- Supplied bi-directional light output as standard with 30% upward light and 70% downward light ratio (directional only option can be selected if required)
- Selectable CCT between 3000K,4000K and 6000K output
- Adjustable suspension points c/w suspension kit
- Aluminium extruded construction with integral driver
- Opal diffuser provides optimal light uniformity
- Pre-wired with 1.5 metre cable
- 1-10V dimmable as standard

GENERAL INFORMATION	
Wattage	60W
Lumens Delivered	6300lm (4000K)
Lm/W	105lm/W (4000K)
Beam Angle	110
CRI	80
CCT	3000/4000/6500K
Input	220-240V
Operating Temp	0°C - 45°C
SDCM	6
UGR	20
Product Weight without Packaging	2.81 kg

TECHNICAL INFORMATION	
Light Source	LED
Colour / Finish	Black
IP Rating	IP20
Class Protection	1
Internal / External	Internal
Surface / Recessed / Suspended	Ceiling, Suspended, Wall
Lumen Depreciation	L80 70,000h
Warranty (Years)	5
CE Mark	Yes
Height	75 mm