Vasco

IP20

Part of the Commercial Linear product category

Model	Vasco CCT 90° Corner Connector Black
Code	AVASLED/90/B
Application	Commercial, Education

MATERIAL INFORMATION

Product Weight without Packaging	0.244 kg
Colour / Finish	Black
Height	75 mm

TECHNICAL INFORMATION

Internal / External	Internal

PRODUCT FEATURES

- Compatible with Vasco LED CCT Bi-directional Suspended Linear
- Compatible with Vasco LED CCT Bi-directional Suspended Linear
- Black

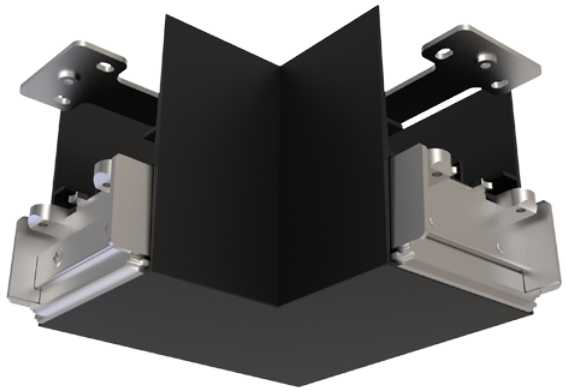



Vasco

IP20

Part of the Commercial Linear product category

Model	Vasco CCT 90° Corner Connector Black
Code	AVASLED/90/B
Application	Commercial, Education



