Exa C

7YR IP66 IK10

Part of the Floodlights product category

Model	Exa C Padel Court Light
Code	AEXC1/1
Application	Commercial, Industrial

GENERAL INFORMATION

Input	220-240V
Wattage	240W
Operating Temp	-30°C to 50°C
Lumens Delivered	39600lm
lm/W	165lm/W
CCT	4000K
Beam Angle	62/108

MATERIAL INFORMATION

Main Material	Aluminium, Polycarbonate
Diffuser Material	PC
Product Weight without Packaging	9.85 kg
Colour / Finish	Grey
Height	225 mm

TECHNICAL INFORMATION

Class Protection	1
Light Source	LED
SDCM (Initial Macadam)	3
CRI	70
Internal / External	Internal / External
Power Factor	0.95
L70 @ 25°C	L70 193,000h

PRODUCT FEATURES

- Marine grade aluminium alloy high output floodlight designed for installation in to padel courts
- Precision lenses that control beam distribution, minimizing glare while ensuring consistent light levels across the playing surface.
- High quality AkzoNobel anti-corrosion powder-coating provides exceptional durability in harsh environments
- Low density aluminium alloy and compact construction ensure the EXA C is lightweight and easy to install
- Visor accessories provide excellent glare control and reduces light spill

ACCESSORIES

AAZLED/76PMA	Floodlight 76mm Pole Mount Adaptor
AAZLED/60PMA	Floodlight 60mm Pole Mount Adaptor

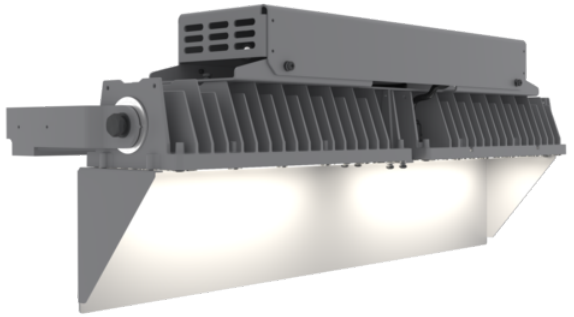

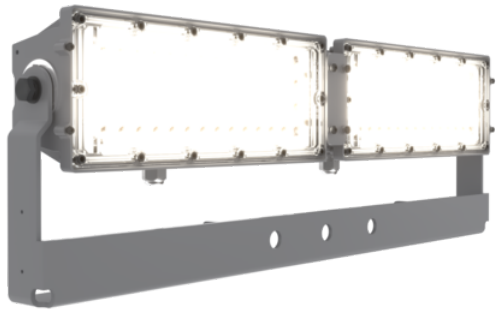

Exa C

7YR IP66 IK10

Part of the Floodlights product category

Model	Exa C Padel Court Light
Code	AEXC1/1
Application	Commercial, Industrial

