ARTERIORS
OUTDOOR

FIELDER OUTDOOR LOUNGE CHAIR

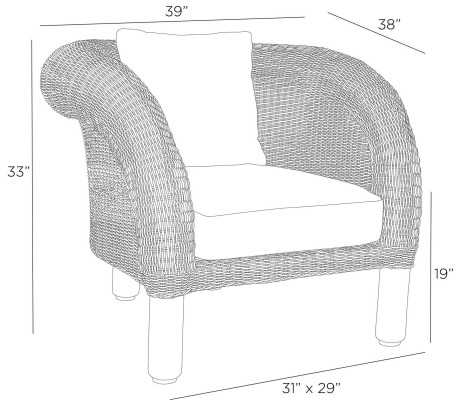

FRS22
Pearl, Bouclé

Like a woven shrug, the fashionable form of this dune twisted synthetic rattan seat was designed to cradle the body like a hug. The playful yet contemporary form is overscaled, with wheat teak wood legs and roll edges. Our Pearl Outdoor Performance Bouclé cushion and lumbar pillow are attached with Velcro. Finish will vary.

APPEARANCE

Materials	Bouclé, Rattan, Wood
Finishes	Pearl, Dune, Wheat
Finish Will Vary	Yes
Top Coat/Sealant	Yes

DIMENSIONS

Overall	W: 39 in x D: 38 in x H: 33 in
Foot Print	W: 31 in x D: 29 in
Arm	W: 6 in x D: 15 in x H: 32 in
Leg	Dia: 3.0 in x H: 9.5 in
Seat Back	W: 17 in x D: 6 in x H: 17 in
Seat	W: 22 in x D: 28 in x H: 19 in
Diagonal Dimensions	W: 50.5 in

SHIPPING

Shipping Requirements	Truck Ship
Product Weight	52.8 lbs
Gross Weight 1	96.0 lbs
Gross Weight 2	15.0 lbs
Shipping Box 1	W: 40.75 in x D: 42.75 in x H: 36.5 in
Shipping Box 2	W: 30.0 in x D: 30.0 in x H: 24.0 in

ADDITIONAL INFO

Fabric Cleaning Code	P - clean with detergent & water
Reupholstery Requirements	4 Yards
Base/Foot Type	Adjustable Nylon Glides

CONTRACT

Contract Suitability	Contract Suitable As Is

REPLACEMENT PARTS

FRS22FOOT

SWATCHES

DSRSBS W 4x4 Swatch: Dune Synthetic Rattan Strandboard

DWTSRS W 4x4 Swatch: Dune Woven Twisted Synthetic Rattan

WHTWS W 4x4 Swatch: OTD Wheat Teak Wood

X75SW 4x4 Swatch: Pearl OTD Performance Bouclé