ARTERIORS

EXETER ACCENT TABLE

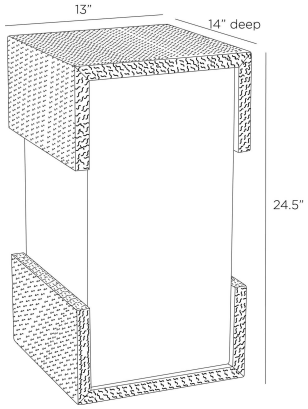

FAI15
Bronze, Brass

Clasp details solve the puzzle of making a simple form more impactful. This offset block style's bronze brass clad accents punctuate a square base of smoke-hued mango wood. Finish will vary.

APPEARANCE

Materials	Brass, Wood
Finishes	Bronze, Smoke
Finish Will Vary	Yes
Top Coat/Sealant	Yes

DIMENSIONS

Overall	W: 13 in x D: 14 in x H: 24.5 in
Foot Print	W: 13 in x D: 14 in
Diagonal Dimensions	W: 28.5 in

SHIPPING

Product Weight	36.0 lbs
Gross Weight 1	42.0 lbs
Shipping Box 1	W: 27.0 in x D: 16.0 in x H: 17.0 in

CONTRACT

Contract Suitability	Contract Suitable As Is