HOOKED WALL / CROSS / SMALL / GRAPHITE

ACTION: WALL LIGHT

KNURL: CROSS

RANGE: HOOKED

A wall light made from solid metal with matte rubber detailing. The base is finished in either stone or graphite powder coating. The pendant length can be adjusted to suit and hooked onto a solid metal hook. Buster + Punch offers a range of light bulbs that look great with this light and are sold separately.

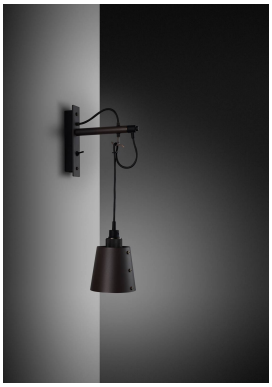





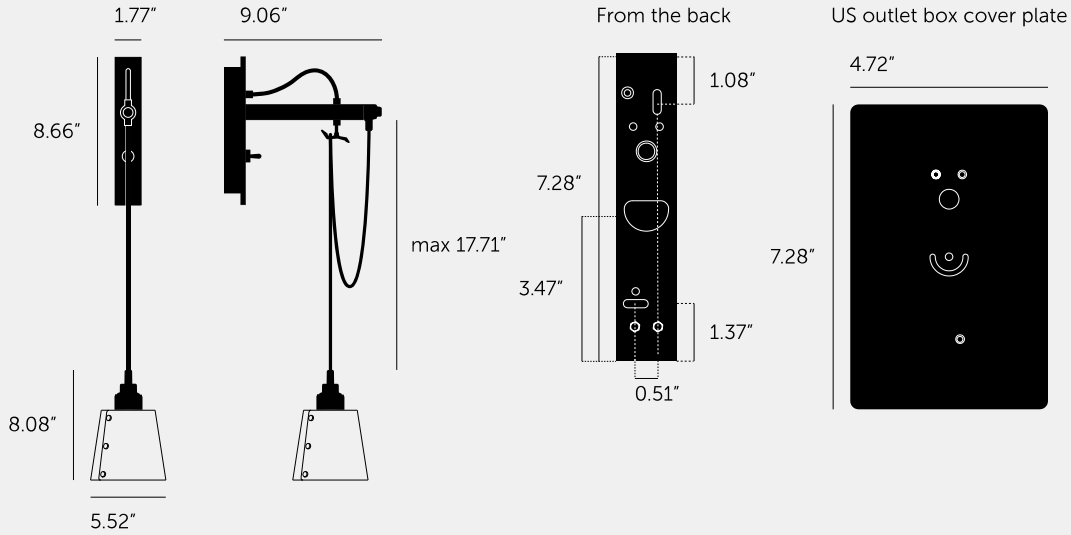

SPECIFICATIONS

Wall light
Solid metal lamp holder
Solid metal hook
110-120V
Adjustable 17.7inch cable
IP20 - Dry locations
Max 40W type A bulb
E26 compatible
Bulbs sold separately
Suitable for both 3.5 and 4″ junction boxes
cULus approved

The length of the pendant can be adjusted to suit using the solid metal hook.

FINISH & SKU NUMBERS

sku:	finish:	size:
NHW-18514	brass	SMALL
NHW-20515	smoked bronze	SMALL
NHW-19516	steel	SMALL

INCLUDED

1 x Hooked Wall Light
1x Hooked Shade
1 x Coin Cap*
1 x Black rubber grommet
* Coin cap installation tool must be used by hand only.

PLEASE NOTE

DISCLAIMER: Always consult a trade professional when installing these hooked wall lighting. Buster + Punch is not responsible for the usage or feasibility of installation requirements. This product is not suitable for damp or wet environments.

CARE INSTRUCTIONS

Wipe with dry cloth with no loose hairs, avoid using any chemicals. Please note all finishes are prone to aging.