HERO LIGHT / CROSS / GRAPHITE

ACTION: PENDANT LIGHT

KNURL: CROSS

RANGE: HERO

Our HERO light is a chandelier made from a 2mm powder coated metal ring, with solid knurled metal detailing. The light pendants can be set in the ring or left to hang through the centre and can be finished with a choice of our light bulbs.









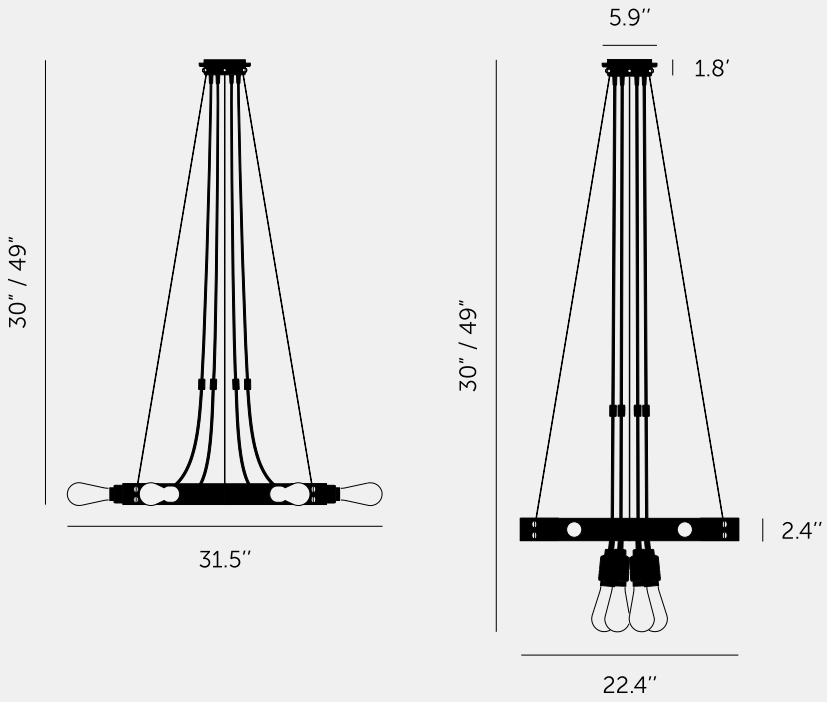

SPECIFICATIONS

6 x Solid Metal Pendants
E26 SCREW
110-120V~
IP20
6 x 20W MAX
Bulbs sold separately
Adjustable 30 inch or 49 inch cables (see finish & SKU numbers below)

The height of the pendant can be adjusted either by placing the excess cable into the cavity space, or by cutting the cable to the desired length. If the cable length is being cut, please ensure this is undertaken by a trained professional to avoid voiding the warranty.

FINISH & SKU NUMBERS

sku:	finish:	size:
NHE-182184	brass	30 INCH DROP
NHE-182185	brass	49 INCH DROP
NHE-202178	smoked bronze	30 INCH DROP
NHE-202179	smoked bronze	49 INCH DROP
NHE-192186	steel	30 INCH DROP
NHE-192187	steel	49 INCH DROP

INCLUDED

1 x 6 Pendant Light Fixture
1 x Crown
x3 Steel wire assemblies
x3 Steel wire spare crimps
x6 Crown coin screw
x6 Crown coin nuts

PLEASE NOTE

DISCLAIMER: Always consult a trade professional when installing this product. Buster + Punch is not responsible for the usage or feasibility of installation requirements. This product is not suitable for damp or wet environments.
Any adjustment work needs to be carried out by a suitably qualified person. Any damage to the product caused by negligence, abusive use or misuse and/or any changes to the product which are not detailed in B+P instruction manuals, is explicitly excluded from the product warranty.

CARE INSTRUCTIONS

Wipe with dry cloth with no loose hairs, avoid using any chemicals. Please note all finishes are prone to aging.