FORKED PENDANT / LINEAR / SHADE / GLOBE / OPAL /

ACTION: PENDANT LIGHT

KNURL: LINEAR

RANGE: FORKED

A light pendant made from cast and machined metal, featuring our signature diamond-cut linear knurl pattern and fork detailing, refined by hand. Its shade is made from hand-spun metal and it comes with a handblown glass globe.









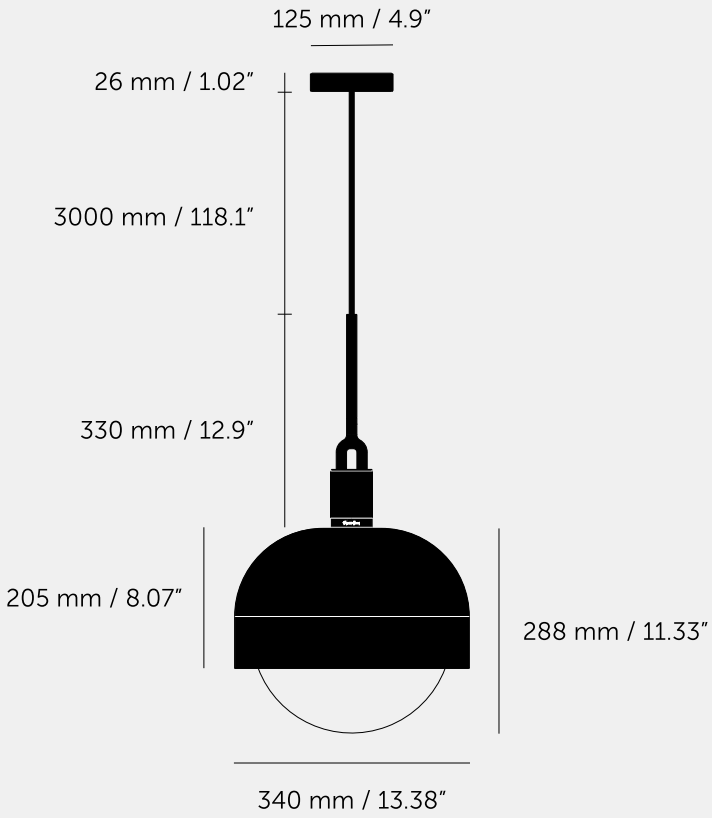

SPECIFICATIONS

Pendant light
1x solid metal lamp holder
Adjustable 118inch cable
E26, 110-120V~, IP20
Max 7W
Bulb included
1x solid metal light shade
1x hand-blown glass globe

The height of the pendant can be adjusted either by placing the excess cable into the cavity space, or by cutting the cable to the desired length. If the cable length is being cut, please ensure this is undertaken by a trained professional to avoid voiding the warranty.

FINISH & SKU NUMBERS

sku:	finish:	size:
NFP-813165	brass	LARGE
NFP-893195	burnt steel	LARGE
NFP-863185	gun metal	LARGE
NFP-833175	steel	LARGE

INCLUDED

1 x Forked Pendant
1 x Forked Shade
1 x Forked Globe
1 x Punch Bulb / Forked

PLEASE NOTE

DISCLAIMER: Always consult a trade professional when installing this product. Buster + Punch is not responsible for the usage or feasibility of installation requirements. This product is not suitable for damp or wet environments.
Any adjustment work needs to be carried out by a suitably qualified person. Any damage to the product caused by negligence, abusive use or misuse and/or any changes to the product which are not detailed in B+P instruction manuals, is explicitly excluded from the product warranty

CARE INSTRUCTIONS

Wipe with dry cloth with no loose hairs, avoid using any chemicals. Please note all finishes are prone to aging.