EXHAUST SPOT / LINEAR / GRAPHITE

ACTION: SPOTLIGHT

KNURL: LINEAR

RANGE: EXHAUST

An adjustable spotlight with a powder coated metal body and solid metal detailing. The spotlight features our signature solid metal linear-knurl baffle and machined torx screws. The baffle captures light and creates a delicate metallic glow, whilst a honeycomb filter delivers a precise, low-glare, directional light. This spotlight fits a GU10 bulb, sold separately.









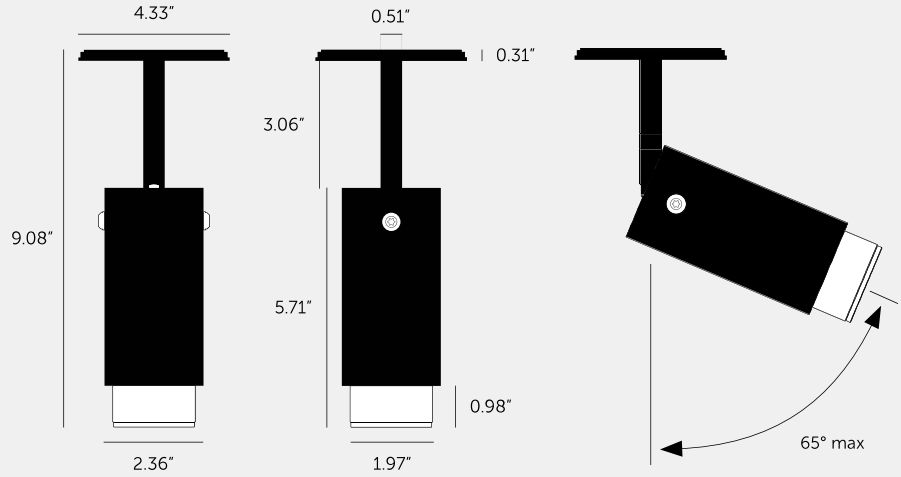

SPECIFICATIONS

Adjustable spotlight
GU10* / 110-120VAC / Dry locations
Max 1 x 9W LED GU10 bulb
*Bulb sold separately
cULus certified / Class 1

INCLUDED

1 x Exhaust Spot Body
1x Exhaust Detail Kit
1 x Honeycomb Filter
1 x Ceiling rose extender
*
* The following come in separate boxes:
1 x Baffle*
2 x Torx Screws*

PLEASE NOTE

DISCLAIMER: Always consult a trade professional when installing this Exhaust Spotlight. Buster + Punch is not responsible for the usage or feasibility of installation requirements. This product is not suitable for damp or wet environments.

FINISH & SKU NUMBERS

sku:	finish:	size:
NEIG-183977	brass	
NEIG-683978	burnt steel	
NEIG-693979	gun metal	
NEIG-193980	steel	

CARE INSTRUCTIONS

Wipe with lint-free cloth with no loose hairs, avoid using any chemicals. Please note all finishes are prone to aging.