DOOR HANDLE SET / PASSAGE / CROSS

ACTION: DOOR HANDLE

KNURL: CROSS

RANGE: DOOR HANDLES

A passage lever door handle set made from solid metal. These door handles feature our signature, diamond-cut, cross-knurl pattern and are refined by hand. Comes complete with a 2-3/8" backset US passage tubular latch with through bolt fixings.









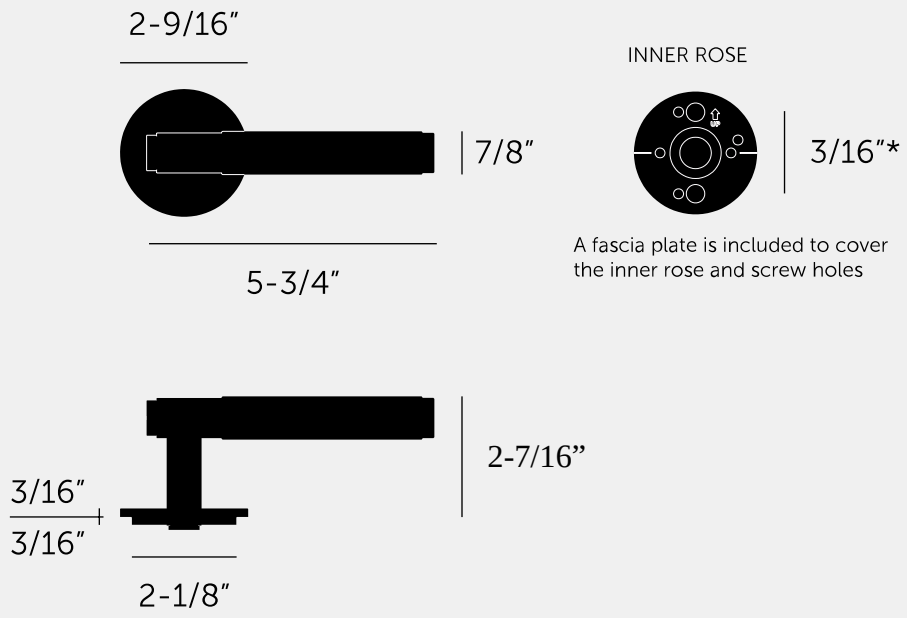

SPECIFICATIONS

A pair of sprung solid metal door lever handles, designed for installation onto a "pre-drilled" door (2-1/8" bore hole).

Designed for use with US (centre distance 41.5mm or 1-5/8") specific latches.

Compatible with tubular latches. Strike and face plates included.

Suitable for interior doors only.

Fits doors thicknesses of minimum 1-3/8" to maximum 2". For thicker doors, longer through bolts and a longer spindle will need to be sourced.

Rose: 2-9/16" diameter, 3/16" thick

FINISH & SKU NUMBERS

sku:	finish:	size:
NLH-02166	black	
NLH-05167	brass	
NDDK-454471	smoked bronze	
NLH-07169	steel	
NDD-134469	warm sunset	

INCLUDED

1 x pair of passage door lever handles
1 x square spindle
1 x 2-3/8" backset US passage tubular latch with through bolt fixings
1 x strike plate
1 x face plate

PLEASE NOTE

This product is best used with a long backset (2-3/4" or 2-3/8"), lightly sprung, two-way rotating tubular latch. DISCLAIMER: Always consult a trade professional when installing these door handles. Buster + Punch is not responsible for the usage or feasibility of installation requirements. This product is not suitable for damp or wet environments. Our door handles are intended for internal use only. Not for commercial use.

CARE INSTRUCTIONS

Wipe with damp cloth with no loose hairs, avoid using any chemicals. All finishes are prone to aging.