TOILET ROLL HOLDER / WITH SHELF / CAST

ACTION: TOILET ROLL HOLDER

KNURL: CAST

RANGE: TOILET ROLL HOLDER

A toilet roll holder with shelf made from solid stainless steel, featuring our signature rough-cast knuckle and hand polished solid metal bar. Thanks to the casting process, no two knuckles are the same. Suitable for bathrooms.









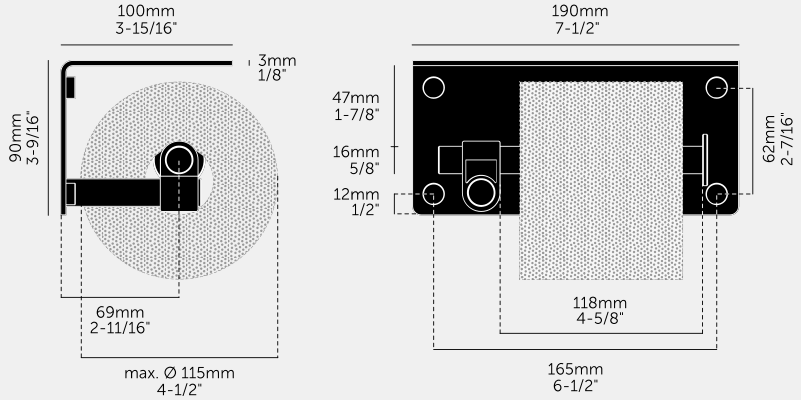

SPECIFICATIONS

A toilet roll holder with an integrated shelf, made from 304 Stainless Steel and featuring a signature rough-cast knuckle, hand-polished solid metal bar and spun metal end cap. The casting process gives each knuckle a unique character.

Designed for bathroom use and finished for durability. The solid-metal shelf provides a convenient surface for small items.

Front fixed using four 3.5mm x 20mm countersunk woodscrews and finished with screw caps.

INCLUDED

1 x toilet roll holder with shelf
4 x 10.8mm plate screw caps
4 x countersunk screw mount O rings
4 x M3x4 countersunk cross recess screws
4 x 3.5mm x 20mm countersunk woodscrews
4 x 4mm x 25mm wall plugs

PLEASE NOTE

DISCLAIMER: Always consult a trade professional when installing this product. Buster + Punch is not responsible for the usage or feasibility of installation requirements.

FINISH & SKU NUMBERS

sku	finish	size
UTA-074320	brass	
UTR-454645	smoked bronze	
UTA-054319	steel	
UTA-484321	welders black	

CARE INSTRUCTIONS

Clean regularly with a soft, dry cloth or duster. Wash periodically using a soft cloth and mild soapy water then dry immediately with a clean, soft cloth. Rubbing or wiping should be carried out in the direction of the polish lines, not across them. DO NOT use oily rags or greasy cloths when wiping the product surface.