THUMBTURN LOCK / LINEAR

ACTION: THUMBTURN LOCK

KNURL: LINEAR

RANGE: THUMBTURN LOCKS

An indoor thumbturn made from solid metal and featuring our elegant linear knurled detailing. Works great on internal bathroom and toilet doors and can be combined with our matching door lever handles.









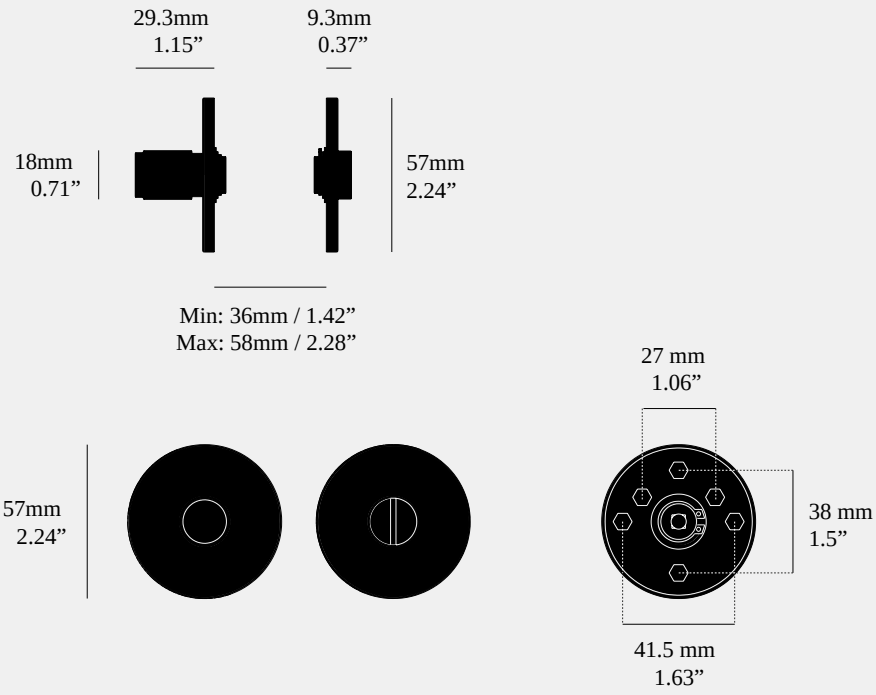

SPECIFICATIONS

A thumbturn lock, with an architectural 4mm thick rose. Designed for installation onto locksets or deadbolt latches with 27mm, 38mm or 41.5mm centre distances. Compatible with either tubular deadbolt latches or mortise locks. Fits doors of thickness: minimum 40mm to maximum 58mm (with supplied fixings*).* For thicker doors, longer through bolts and a longer spindle will need to be sourced.

INCLUDED

1 x thumbturn lock
1 x 5mm x 5mm square spindle

FINISH & SKU NUMBERS

sku	finish	size
UDT-054558	brass	
NLL-091083	gun metal	
UDT-455262	smoked bronze	
UDT-074589	steel	
UDT-484018	welders black	

PLEASE NOTE

DISCLAIMER: Always consult a trade professional when installing these thumbturn locks. Buster + Punch is not responsible for the usage or feasibility of installation requirements.

CARE INSTRUCTIONS

Wipe with damp cloth with no loose hairs, avoid using any chemicals. All finishes are prone to aging.