FORKED CEILING / LINEAR / SHADE / GLOBE / OPAL /

ACTION: CEILING LIGHT

KNURL: LINEAR

RANGE: FORKED

A ceiling light made from cast and machined metal, featuring our signature diamond-cut linear knurl pattern and fork detailing, refined by hand. Its shade is made from hand-spun metal and it comes with a handblown glass globe.









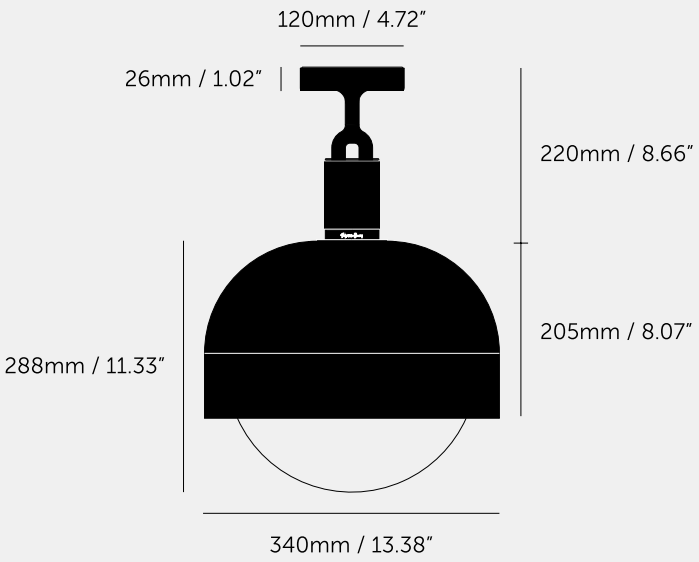

SPECIFICATIONS

Ceiling light
1x solid metal lamp holder
E27 / 220-240 VAC / IP20
Max 7W
Bulb included
CB Certified / Class 1
1x solid metal light shade
1x hand-blown glass globe
E27 compatible

INCLUDED

1 x Forked Ceiling
1 x Forked Shade
1 x Forked Globe
1 x Punch Bulb / Forked

FINISH & SKU NUMBERS

sku	finish	size
GFC-823129	brass	LARGE
GFC-893159	burnt steel	LARGE
GFC-863149	gun metal	LARGE
GFC-833139	steel	LARGE

PLEASE NOTE

DISCLAIMER: Always consult a trade professional when installing this light. Buster + Punch is not responsible for the usage or feasibility of installation requirements. This product is not suitable for damp or wet environments.

CARE INSTRUCTIONS

Wipe with dry cloth with no loose hairs, avoid using any chemicals. Please note all finishes are prone to aging.