# DOOR KNOB / FIXED / SINGLE-SIDED / LINEAR

**ACTION: FIXED DOOR KNOB**

**KNURL: LINEAR**

**RANGE: DOOR KNOBS**

A fixed, single-sided, door knob made from solid metal with a solid spun metal plate on the reverse side of the door. Machined from solid metal bar and featuring our elegant linear-knurl detailing. Works great on all internal doors and can be teamed up with our matching door accessories.









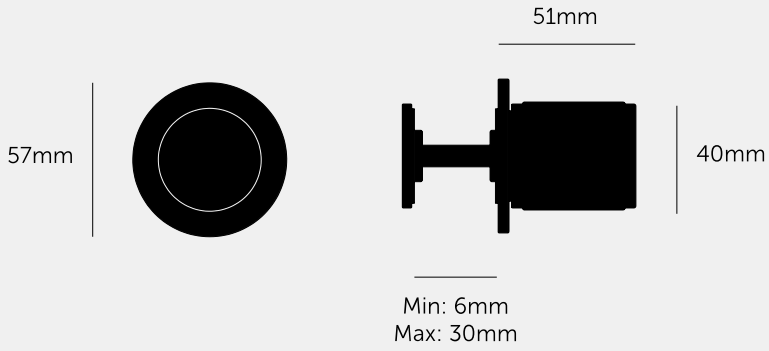


## SPECIFICATIONS

A single solid metal door knob, with rear side cosmetic circular disc. Designed to be fixed onto any wooden or glass door. Fits doors of thickness minimum 6mm to maximum
30mm (with supplied fixings*).

*For thicker doors, a longer countersunk M8 bolt will need to be sourced.

## FINISH & SKU NUMBERS

| sku: | finish: | size: |
|---|---|---|
| RDK-091059 | gun metal | |
| RDK-071058 | steel | |
| RDK-481056 | welders black | |

## INCLUDED

1 x single-sided fixed door knob
1 x 5mm allen key

## PLEASE NOTE

DISCLAIMER: Always consult a trade professional when installing these door knobs. Buster + Punch is not responsible for the usage or feasibility of installation requirements. This product is not suitable for damp or wet environments. Our door handles are intended for internal use only. Not for commercial use.

## CARE INSTRUCTIONS

Wipe with damp cloth with no loose hairs, avoid using any chemicals. Please note all finishes are prone to aging.