EXHAUST TRACK / CROSS / STONE

ACTION: SPOTLIGHT

KNURL: CROSS

RANGE: EXHAUST

A track spotlight with a powder coated metal body and solid metal detailing. The spotlight features our signature solid metal cross-knurl baffle and machined coin screws. The baffle captures light and creates a delicate metallic glow, whilst a honeycomb filter delivers precise, low-glare, directional light. This spotlight is fully adjustable and comes with a black 3-circuit track adapter. Examples of compatible track are Global, Powergear, Eutrac, Nordic, Unipro. The spotlight fits a GU10 bulb, sold separately.









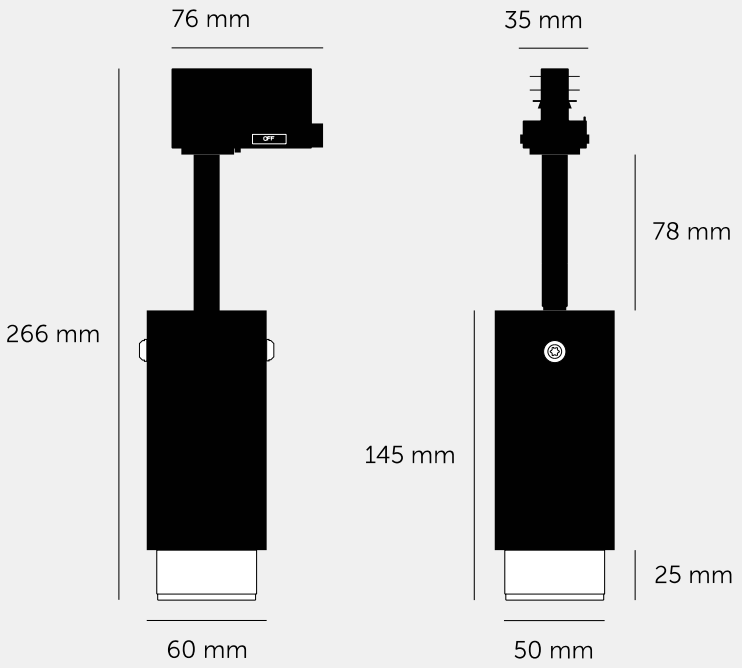

SPECIFICATIONS

Track spotlight
GU10 / 220-240VAC / IP20
Max 1 x 9W LED GU10 bulb
*Bulb sold separately
CB certified / Class 1

Exhaust track spotlight uses a 3-circuit adapter, allowing you to control separate groups of lights on the same track using different switches. This feature requires a 3-circuit track. It will not work on a standard 1-circuit system, where all lights turn on and off simultaneously.
Examples of compatible track: Global, Powergear, Eutrac, Nordic, Unipro

INCLUDED

1 x Exhaust Track Body
1x Exhaust Detail Kit
1 x Honeycomb Filter
1 x Ceiling rose extender
*
* The following come in separate boxes:
1 x Baffle*
2 x Torx Screws*

FINISH & SKU NUMBERS

sku	finish	size
REIG-224032	black	
REIG-254033	brass	
REIG-604034	smoked bronze	
REIG-234035	steel	

PLEASE NOTE

DISCLAIMER: Always consult a trade professional when installing this product. Buster + Punch is not responsible for the usage or feasibility of installation requirements. This product is not suitable for damp or wet environments.

CARE INSTRUCTIONS

Wipe with lint-free cloth with no loose hairs, avoid using any chemicals. Please note all finishes are prone to aging.