KITCHEN FAUCET / PULL-OUT WITH DUAL SPRAY /

ACTION: KITCHEN FAUCET

KNURL: CROSS

RANGE: KITCHEN FAUCETS

A kitchen faucet with single lever mixer and dual spray pull out. This faucet has been cast, sand-blasted and machined from solid metal in Italy. It features our signature cross-knurl pattern and is refined by hand. Flow rate at 58 PSI (4 BAR) is 1.74GPM.









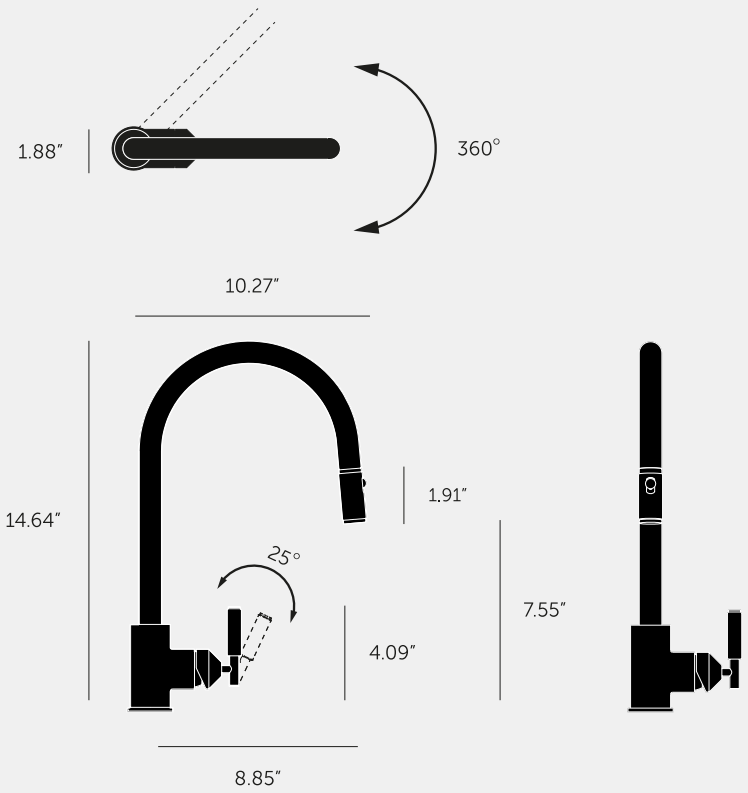

SPECIFICATIONS

A kitchen faucet with pull-out and dual spray function, mixing warm and cold, aerated water. The pull-out nozzle can be toggled between aerated or a needle spray. Needle spray covers a wider area than aerated spray.
Maximum thickness of mounting surface 70mm, with supplied fixings.
Minimum recommended water pressure: 7.25 PSI (0.5 BAR).
Maximum recommended water pressure: 72 PSI (5 BAR).
Recommended maximum hot water temperature: 70 °C (158°F).
Recommended temperature range: 5 – 60 °C (41 – 140 °F).
The total length of the pull-out hose is 66.9".
Cartridge material: ceramic
360 degree swivel spout.

Note: Exceeding these temperatures or water pressures can result in damage to the tap. A pressure reducing valve may be required to be fitted in high water pressure situations.

FINISH & SKU NUMBERS

sku:	finish:	size:
NKT-053254	brass	
NKT-353256	gun metal	
NKT-073255	steel	
NKT-593257	welders black	

INCLUDED

1 x Kitchen Faucet Mixer with Dual Spray Pull-out
2 x Flexible connector hoses
1 x Kitchen Mixer Faucet
1 x Tap Base and set of washers
1 x Threaded bar and nut
1 x Supporting tap brace (for surfaces with thickness < 5mm)

PLEASE NOTE

All Buster + Punch mixer taps conform to standard EN817. In some cases, local housing regulations may require mixer taps to be of a higher minimum water pressure standard. In this instance we would recommend consulting with a certified plumber about installing a pressure regulator or similar device. Mixer taps are tested to work with a max. pressure of 10 bar (1000 kPa) and recommended working pressure range is 1.0 – 5.0 bar (100 kPa – 500 kPa).
Images shown are for illustration purposes only.

CARE INSTRUCTIONS

Wipe with damp cloth with no loose hairs, avoid using any chemicals. Please note all finishes are prone to aging.