DIMMER MODULE / 1-10V / 2 WAY

ACTION: DIMMER MODULE

KNURL: N/A

RANGE: DIMMER MODULE

A 2-Way 1-10V dimmer module, with a soft rotary action, for use with Buster + Punch's custom switches. Combine with a wall plate and detail kit in the finish and knurl of your choice to create a future-proof Buster + Punch dimmer – customised by you and engineered to perfection by us.

See tech spec for more information and compatibility. If in doubt, always consult a licensed electrician.

Note: rotary action is smooth and silent during operation.





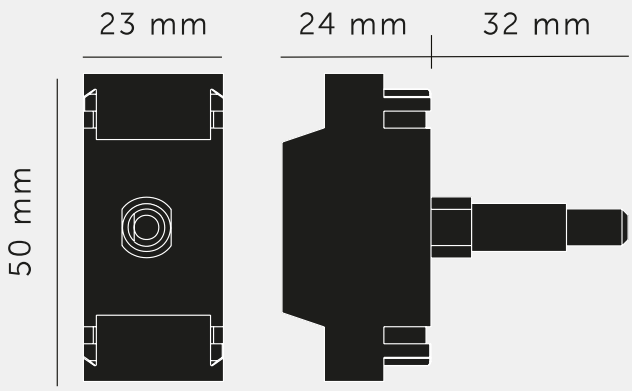

SPECIFICATIONS

Style: Push On/Off Rotary Dimmer
Dimming Type:1-10v
Input: 250 VAC 50Hz
Load: 6A
BS EN 60669-2-1
Certified for use in UK and Europe:
UKCA / CE

This dimmer switch is designed for high frequency dimmable ballasts that require a 0–10V or 1–10V control signal.
Do not use this dimmer switch for any other purpose.
The dimmer switch will be damaged if used for these applications.

Do not connect the 1–10V control terminals to the mains.
Incorrect use will make your guarantee invalid.

Note: rotary action is smooth and silent during operation.

WARNING: The switch in this product is rated at 6A. Check the in-rush current for LED bulbs or drivers does not exceed 6A before connecting. Fit inrush current limiters where necessary.

INCLUDED

1 x Dimmer Module (1-10V)
1 x Anti-Rotation Adapter

PLEASE NOTE

DISCLAIMER: Always consult a trade professional when installing this product. Buster + Punch is not responsible for the usage or feasibility of installation requirements. This product is not suitable for damp or wet environments.

FINISH & SKU NUMBERS

finish	size

CARE INSTRUCTIONS

Wipe with a dry lint free cloth with no loose hairs, avoid using any chemicals. Please note that finishes may age naturally with time and regular use.