# 2G GPO SOCKET / WITHOUT LOGO / CROSS

**ACTION: POWER OUTLET**

**KNURL: CROSS**

**RANGE: GPO SOCKETS**

A general purpose outlet with tactile diamond-cut, cross knurled toggle arms. The GPO is finished with a solid metal flat plate and our signature coin screws. Available in four different finishes, or customisable with a range detail kits to suit any interior. Can be used in combination with our matching dimmers and toggle switches. Comes complete in the box.










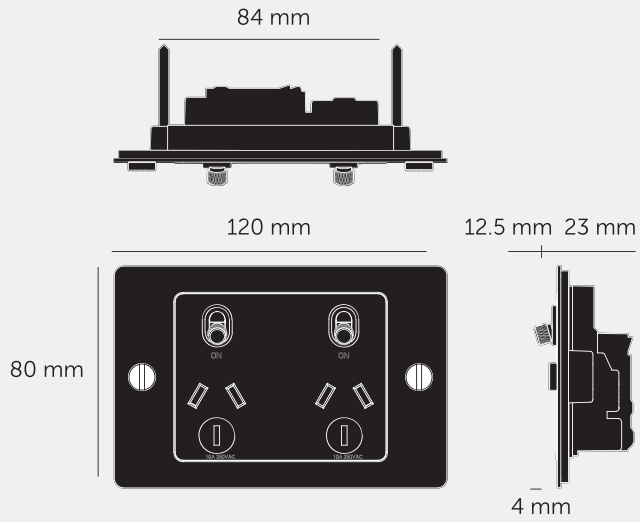


## SPECIFICATIONS

Outlet: 2G GPO
Socket Outlet Rating : 250VAC / 10A
Backbox: Standard 84mm fixing centres. Allow depth of module + sufficient space for connections when choosing a backbox.
Supplied with 2x 6-32x2" (51mm) mounting screws.
Must be earthed.
Compliant to Standards AS/NZS 3112:2017 Inc A1, AS/NZS 3100:2022
Certificate No.: SAA-180906-EA
This piece features a 3 mm shadow gap when installed.

## INCLUDED

1x GPO with GPO Details
2x Mounting Screws

## FINISH & SKU NUMBERS

| | finish | size |
|---|---|---|

## PLEASE NOTE

DISCLAIMER: Always consult a trade professional when installing this product. Buster + Punch is not responsible for the usage or feasibility of installation requirements. This product is not suitable for damp or wet environments.

## CARE INSTRUCTIONS

Wipe with a dry lint free cloth with no loose hairs, avoid using any chemicals. Please note that finishes may age naturally with time and regular use.