ARTERIORS

KALAMA LINEAR CHANDELIER

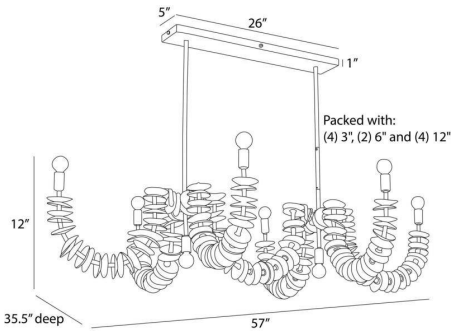



DLS16
H: 17 IN, W: 57 IN, D: 35.5 IN,
Ivory Coconut Shell

Both whimsical and natural, ivory coconut shell discs are strung on an ivory jute wrapped frame. Recalling the dramatic drape of a necklace, the directional strands hang airily from pipes of antique brass iron. A matching square canopy holds this dramatic fixture securely to the ceiling. Finish will vary.

APPEARANCE

Material	Coconut, Jute, Iron
Material Type	Shell
Finish	Ivory, Antique Brass
Finish Will Vary	Yes
Top Coat/Sealant	No

DIMENSIONS

Canopy	H: 1 IN, W: 26 IN, D: 5 IN
Chandelier	H: 12 IN, W: 57 IN, D: 35.5 IN
Minimum Hanging	H: 17 IN
Max Hanging Height	49 in

WIRING

Rating	Indoor Only
Cord	10 FT, Clear/Silver, SVT
Socket	8, Type B - E12
Maximum Watt	40
Voltage	110-120 V

COMPONENTS

Pipe or Chain Included	(4) 3", (2) 6", (4) 12"

CERTIFICATIONS

Certifications	Mexico, United Arab Emirates, European Union, United States, Canada, Australia

COMPLIANCY

UL/ETL	Yes
CB	Yes
RoHS	Yes

SHIPPING

Shipping Requirements	TruckShip
Product Weight	19.8 lbs
Gross Weight 1	30.86 lbs
Shipping Box 1	H: 21 IN, L: 39 IN, W: 60 IN

REPLACEMENT PARTS

Replacement Part 1	PIPE-614
Replacement Part 1 Dim	(1) 3", (1) 6", (1) 12"

CONTRACT

Contract Suitable	Yes