Flexi RF

Reliable RF Components In Stock

Datasheet

SMA Male RF Load Termination Up To 18 GHz | 1 Watts | Passivated Stainless Steel

P/N: FR3-SMA-J-03S

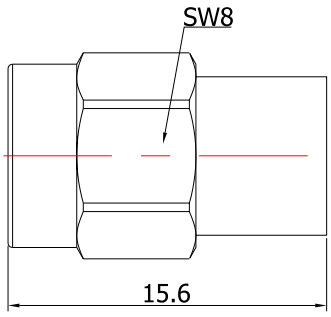

Dimensions are in mm



Product Configuration

Connector Series	SMA
Connector Polarity	Standard
Connector Gender	Male
Connector Impedance (Ohm)	50

Electrical Specifications

Frequency	DC - 18GHz
VSWR / Return Loss	1.2
Power, Max Input (Watts)	1

Mechanical Data

Min. Mating Cycles	≥500
Weight	3.41 g
Body Material	Stainless Steel
Body Plating	Passivated

Enviromental Specifications

RoHS Compliant	Yes
Operating Temperature Range	-55 ºC to +125 ºC
MIL/STD	N/A

Test Report

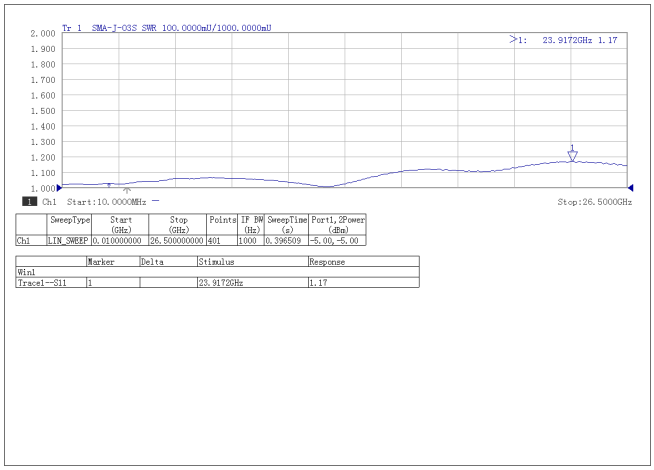

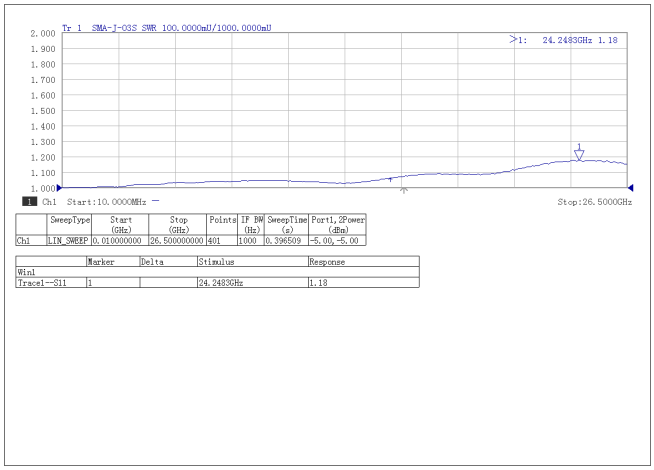

Flexi RF Inc

(650)880-9199

20045 Stevens Creek Blvd., Suite 2B, Cupertino, CA 95014

sales@flexirf.com

www.flexirf.com