Flexi RF
Reliable RF Components In Stock

Datasheet

N Female RF Load Termination Up To 18 GHz | 2 Watts | Passivated Stainless Steel

P/N: FR3-N-K-03S

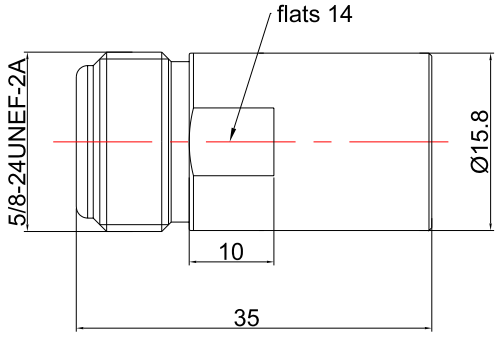

Dimensions are in mm



Product Configuration

Connector Series	N
Connector Polarity	Standard
Connector Gender	Female
Connector Impedance (Ohm)	50

Electrical Specifications

Frequency	DC -18GHz
VSWR / Return Loss	1.15
Power, Max Input (Watts)	2

Mechanical Data

Min. Mating Cycles	≥500
Weight	39.8 g
Body Material	Stainless Steel
Body Plating	Passivated

Enviromental Specifications

RoHS Compliant	Yes
Operating Temperature Range	-55 ºC to +125 ºC
MIL/STD	N/A

Test Report

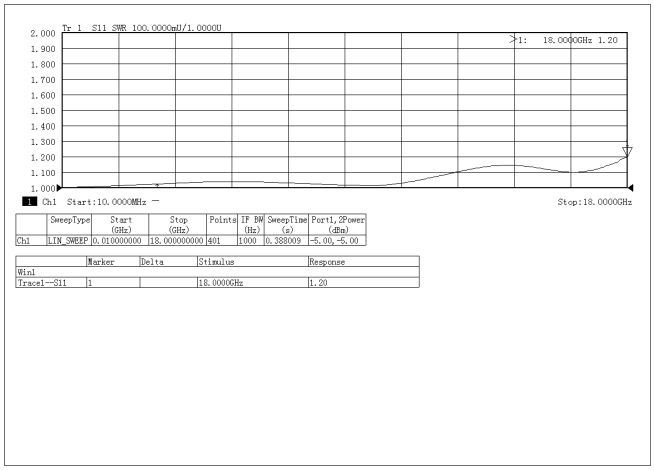

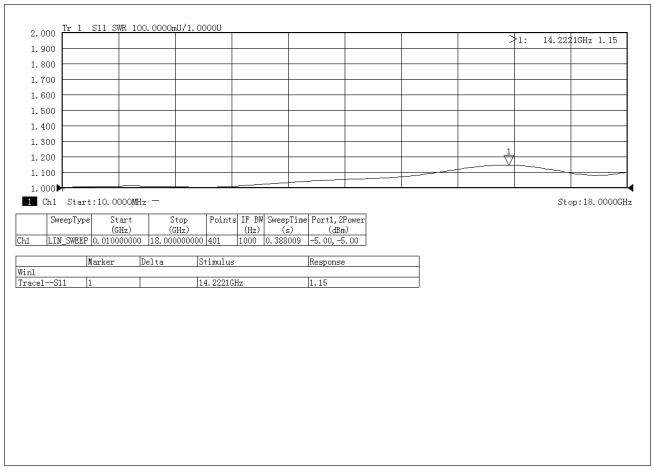

Flexi RF Inc

(650)880-9199
20045 Stevens Creek Blvd., Suite 2B, Cupertino, CA 95014
sales@flexirf.com
www.flexirf.com