Datasheet

GPPO (Mini-SMP) Male Bulkhead Mount Connector | DC - 40GHz

GPPO-JYD2-F

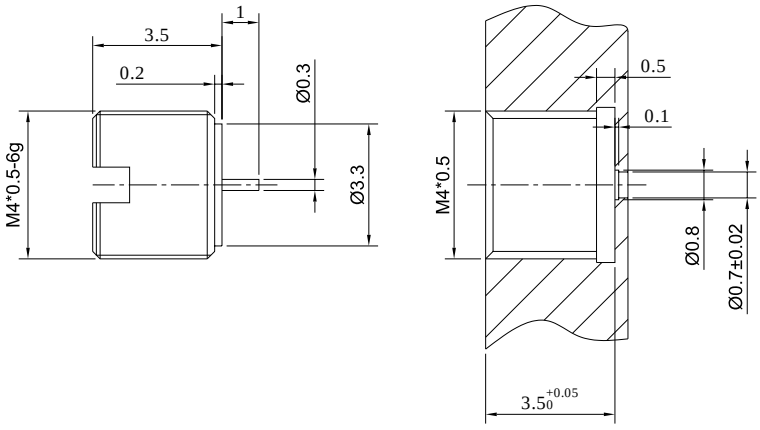

Dimensions are in mm



Product Configuration

Connector Series	GPPO(Mini-SMP)
Connector Polarity	Standard
Connector Gender	Male
Body Style	Straight
Termination Type	Terminal
Connector Impedance (Ohm)	50
Mount Method	None

Mechanical Data

Min. Mating Cycles	≥500
Weight (g)	0.5 g
Body Material	Brass
Body Plating	Gold

Electrical Specifications

Frequency	DC - 40GHz
VSWR / Return Loss	1.22
Insertion Loss	≤ 0.1 x Sqrt.(f_GHz)

Enviromental Specifications

RoHS Compliant	Yes
Operating Temperature Range	-55 ºC to +165ºC
MIL/STD	N/A

Gwave Technology Inc

(888)251-2240

87 Patricia Ct, Mountain View, CA 94041

sales@gwavetech.com

www.gwavetech.com